DTIC
ELECTE
FEB 21 1994
S D
F

PRECISION SPEED REDUCER FOR ROBOTICS AND MANUFACTURING

FINAL REPORT

Appendicies

This document has been approved for public release and sale; its distribution is unlimited.

SYNKINETICS, INC. 01FEB95
Contract # DASG60-94-C-0098

19950213 059

Appendix-A: Drawings for ZBcam prototype test unit

Accesion For	
NTIS CRA&I	☑
DTIC TAB	☐
Unannounced	☐
Justification	
By	
Distribution /	
Availability Codes	
Dist	Avail and / or Special
A-1	

DTIC QUALITY INSPECTED 4

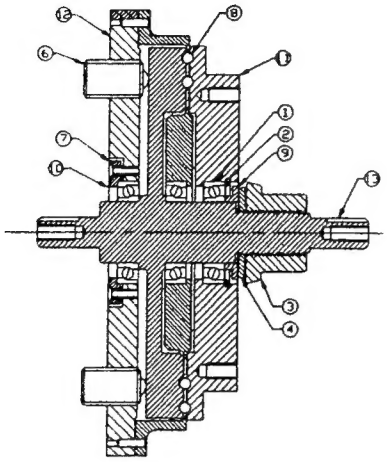

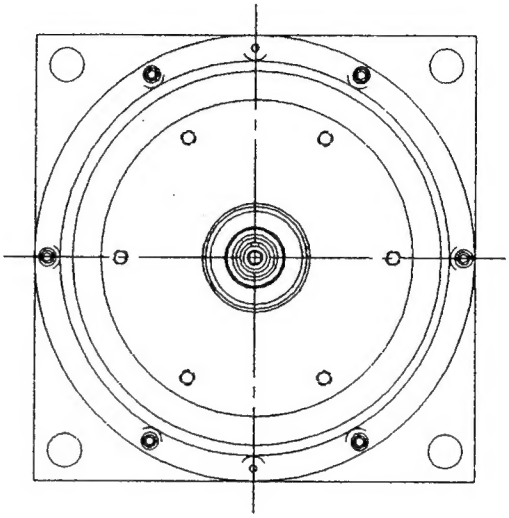

PROPRIETARY	TOLERENCES	APPROVALS	Synkinetics, Inc. 1 DeAngelo Drive Bedford, MA 01730
	UNLESS OTHERWISE SPECIFIED .XX = ±.0500 .XXX = ±.0050 .XXXX = ±.0005 ANG. = ±1/2° ALL DIMENSIONS ARE IN INCHES	CUMMINGHAM 12/22/94	ZB SYNK DRIVE
	1001/800	ACADVM/PROJECTS 1001/001A/AA01.DWG	1001 / 001A / AA / 1/1
	NEXT ASSY	FILE PATH	PROC NO / DRWG NO. / REV / PAGE

Synkinetics, inc.	1001	001B	AA	1/1
	PROG NO	DRWG NO.	REV	PAGE

ITEM	QTY	MFG	PART NUMBER	DESCRIPTION
32				
31				
30				
29				
28				
27				
26				
25				
24				
23				
22				
21				
20				
19				
18				
17				
16				
15				
14				
13	1	000	1001-102D	DRIVE CAM / SHAFT
12	1	000	1001-003A	REACTION DISK ASSY
11	1	000	1001-103D	DRIVEN CAM
10	1	000	1001-105D	RETAINER #2
9	1	000	1001-104D	RETAINER #1
8	72	?		5/32 DIA STEEL BALL
7	6	001		#6-32 X 1/2 LG FLAT HD SCREW
6	6	104	SSBH-62	BALL PLUNGER
5	1	103	B1500-060	SPRING WASHER
4	1	103	B1500-0455	SPRING WASHER
3	1	102	91031A036	FLANGE NUT
2	1	101	N5000-165	RETAINING RING
1	3	100	7190SCD	BEARING

PROPRIETARY

The information contained in this document or item is the property of SYNKINETICS, INC. and shall be kept in strict confidence. Except with written permission of SYNKINETICS, such information or item shall not be published, disclosed to others, or used for manufacture or sale or for any other purpose, and this document or item shall not be reproduced in whole or in part. If permission is granted for reproduction, this legend shall be included in any such reproduction. This document or item shall be returned to SYNKINETICS upon request, or for which it was made available to the recipient or termination of relationship with recipient, whichever first occurs. Any recipient so agrees by acceptance of this document or item.

APPROVALS

CUNNINGHAM 12/27/94

ACADWIN/PROJECTS
1001/001BAA01

FILE PATH

Synkinetics, inc.
1 DeAngelo Drive
Bedford, MA 01730

BILL OF MATERIALS

ZB SYNK DRIVE
SBIR PHASE 1

1001	001B	AA	1/1
PROG NO	DRWG NO.	REV	PAGE

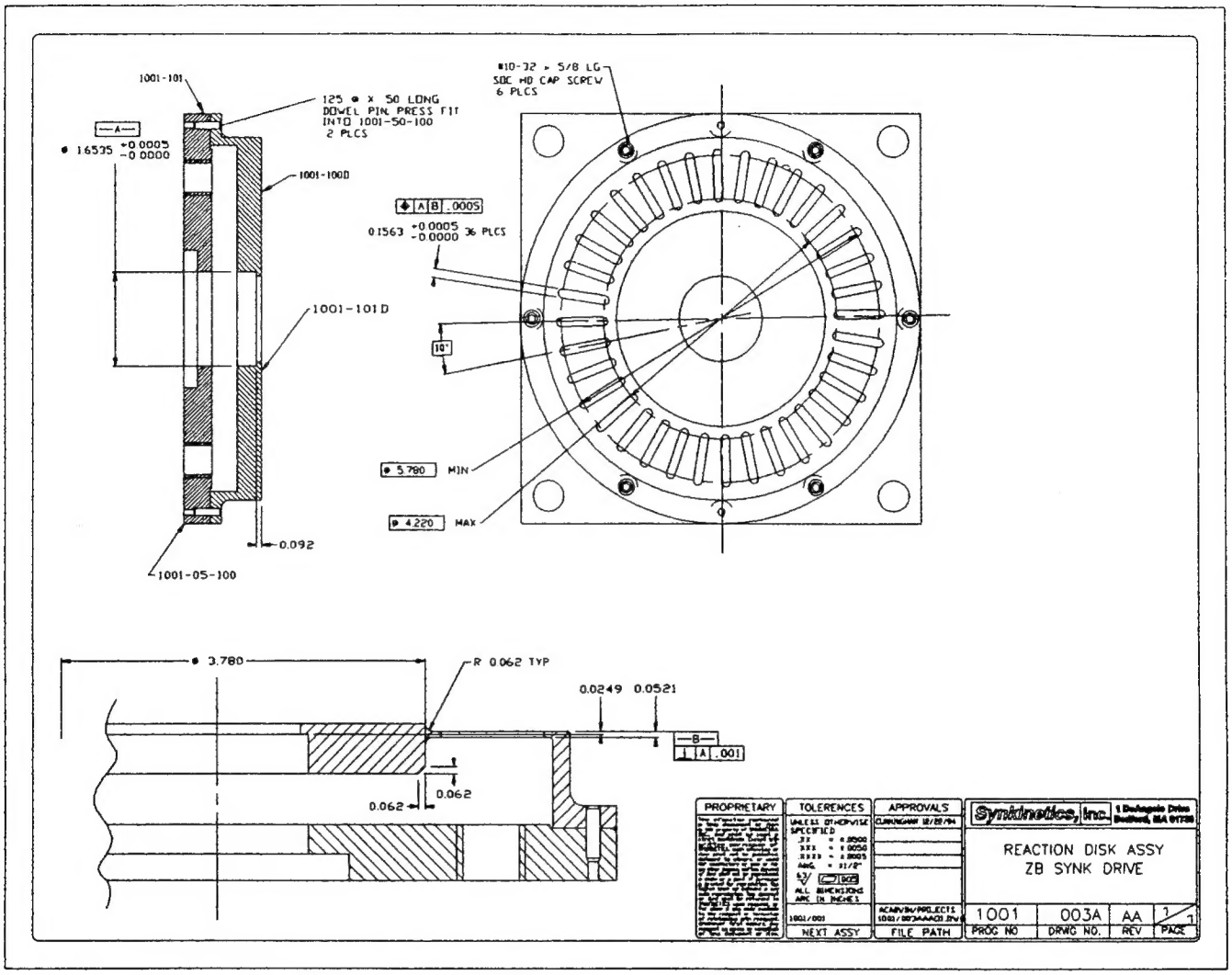
1001-101
125 ⌀ x .50 LONG
DOWEL PIN PRESS FIT
INTO 1001-50-100
2 PLCS
#10-32 x 5/8 LG
SOC HD CAP SCREW
6 PLCS
⌀ 1.6535 +0.0005 -0.0000
1001-100D
⌖ A B .0005
0.1563 +0.0005 -0.0000 36 PLCS
1001-101D
10°
⌀ 5.780 MIN
⌀ 4.220 MAX
0.092
1001-05-100
⌀ 3.780
R 0.062 TYP
0.0249
0.0521
B
⊥ A .001
0.062
0.062
PROPRIETARY
TOLERENCES
UNLESS OTHERWISE SPECIFIED
ALL DIMENSIONS ARE IN INCHES
NEXT ASSY
APPROVALS
FILE PATH
Synkinetics, Inc.
REACTION DISK ASSY
ZB SYNK DRIVE
1001
PROC NO
003A
DRWG NO.
AA
REV
PAGE

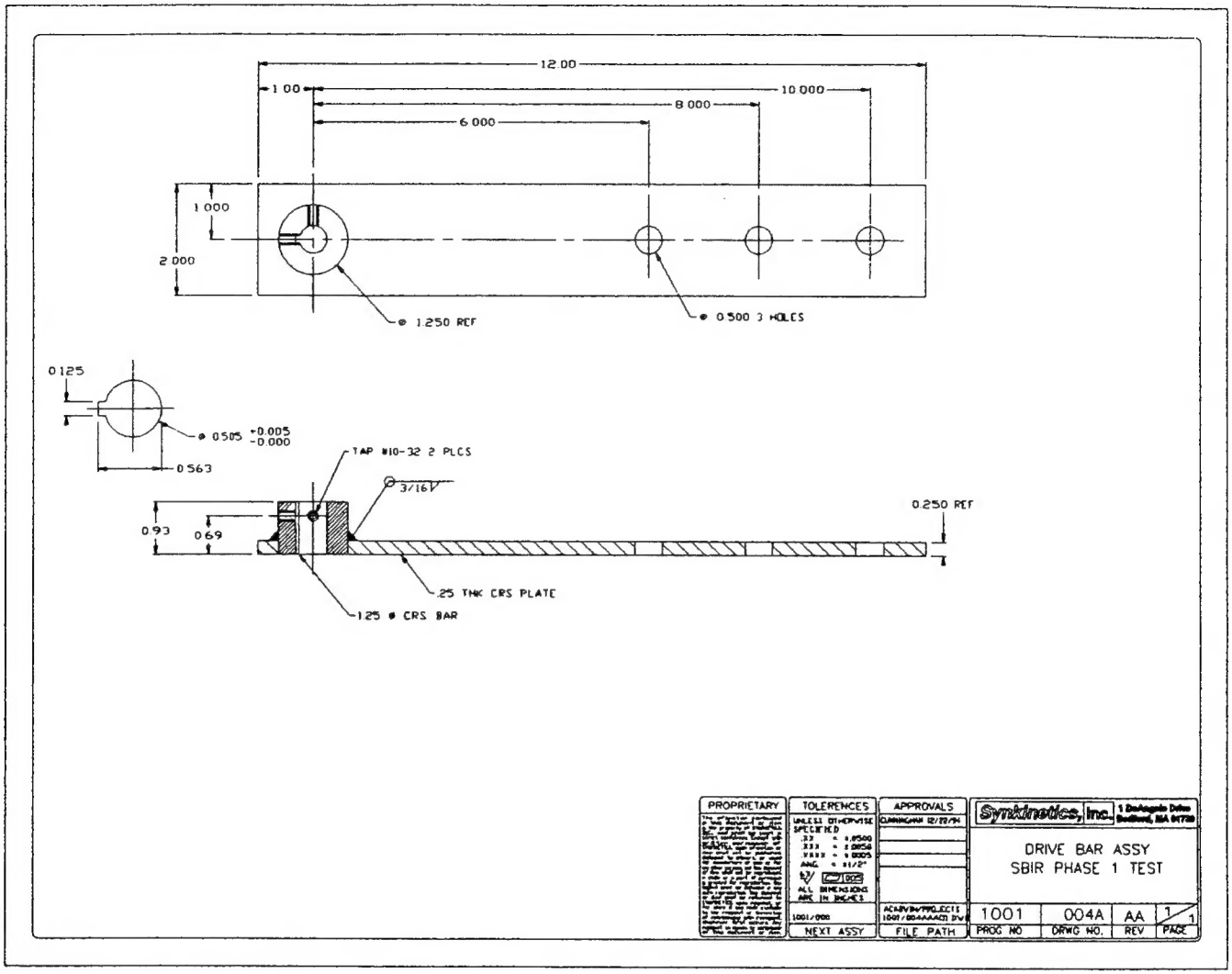
12.00
1.00
10.000
8.000
6.000
1.000
2.000
⌀ 1.250 REF
⌀ 0.500 3 HOLES
0.125
⌀ 0.505 +0.005 -0.000
0.563
TAP #10-32 2 PLCS
⌀ 3/16 Ⅴ
0.250 REF
0.93
0.69
.25 THK CRS PLATE
.125 ⌀ CRS BAR
PROPRIETARY
TOLERENCES
APPROVALS
Synkinetics, Inc.
DRIVE BAR ASSY
SBIR PHASE 1 TEST
1001
004A
AA
1
1
PROG NO
DRWG NO.
REV
PAGE

Synkinetics, inc.	1001	000B	AA	1/1
	PROG NO	DRWG NO.	REV	PAGE

ITEM	QTY	MFG	PART NUMBER	DESCRIPTION
32				
31				
30				
29				
28				
27				
26				
25				
24				
23				
22	1	000	1001-106D	DRIVEN ARM
21	1	000	1001-004A	DRIVE BAR ASSY
20	4	000	1001-107D	FOOT
19	2	000	1001-108D	LOCK, DRIVEN ARM
18	2	000	1001-109D	LOCK, DRIVE ARM
17	1	000	1001-110D	PLATE
16	1	000	1001-001D	ZB SYNK DRIVE ASSY
15	1	102	1757T11	2LB SPRING SCALE
14	1	102	1757T22	50 LB SPRING SCALE
13	2	001		#10-32 X 3/8 LG SOC HD SET SCREW
12	12	001		1/4 LOCKWASHER
11	12	001		1/4-20 X 1 LG HHCS
10	4	001		3/8 LOCKWASHER
9	2	001		3/8-16 HEX NUT
8	6	001		3/8-16 X 1-1/4 LG HHCS
7	4	001		1/2 LOCKWASHER
6	4	001		1/2-13 X 1-1/4 LG HHCS
5	2	102	5033A5	6 INCH C-CLAMP
4	2	105	25-109J	DIAL INDICATOR
3	2	105	708AZ	DIAL INDICATOR
2	2	105	22429	DOVETAIL BODY CLAMP
1	4	105	657AA	MAGNETIC BASE INDICATOR HOLDER

PROPRIETARY

The information contained in this document or item is the property of SYNKINETICS, INC. and shall be kept in strict confidence. Except with written permission of SYNKINETICS such information or item shall not be published, disclosed to others, or used for manufacture or sale or for any other purpose, and this document or item shall not be reproduced, in whole or in part. If permission is granted for reproduction, this legend shall be included in any such reproduction. This document or item shall be returned to SYNKINETICS upon request, or for which it was made available to the recipient or termination of relationship with recipient, whichever first occurs. Any recipient so agrees by acceptance of this document or item.

APPROVALS

CUNNINGHAM 12/27/94

ACADWIN/PROJECTS
1001/000BAA01

FILE PATH

Synkinetics, inc.
1 DeAngelo Drive
Bedford, MA 01730

BILL OF MATERIALS

TEST STAND
SBIR PHASE 1

1001	000B	AA	1/1
PROG NO	DRWG NO.	REV	PAGE

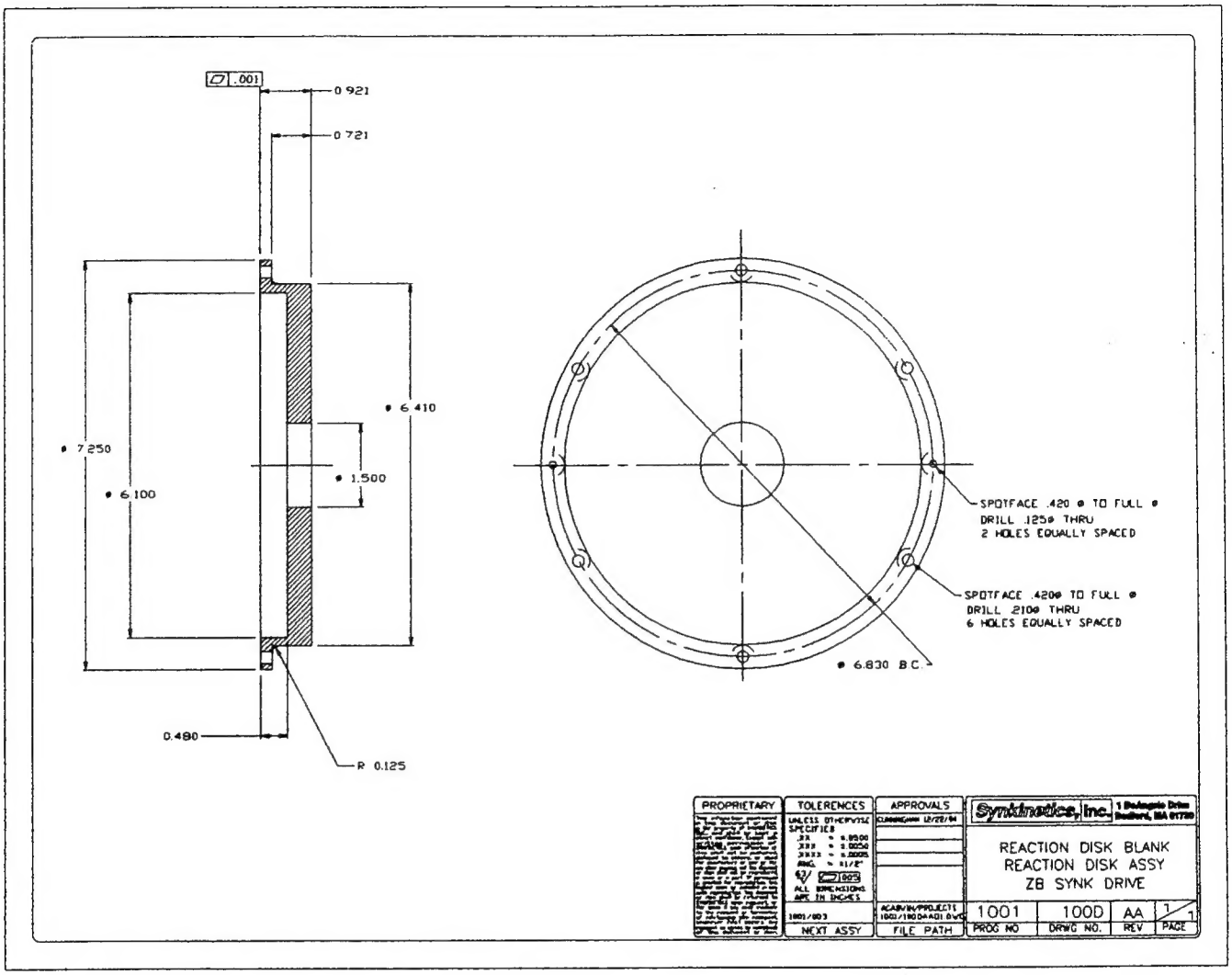
.001
0.921
0.721
ø 6.410
ø 7.250
ø 6.100
ø 1.500
0.480
R 0.125
SPOTFACE .420 ø TO FULL ø
DRILL .125ø THRU
2 HOLES EQUALLY SPACED
SPOTFACE .420ø TO FULL ø
DRILL .210ø THRU
6 HOLES EQUALLY SPACED
ø 6.830 B.C.
PROPRIETARY
TOLERENCES
UNLESS OTHERWISE SPECIFIED
ALL DIMENSIONS ARE IN INCHES
APPROVALS
Synkinetics, Inc.
REACTION DISK BLANK
REACTION DISK ASSY
ZB SYNK DRIVE
1001
100D
AA
PROG NO
DRWG NO.
REV
PAGE
NEXT ASSY
FILE PATH

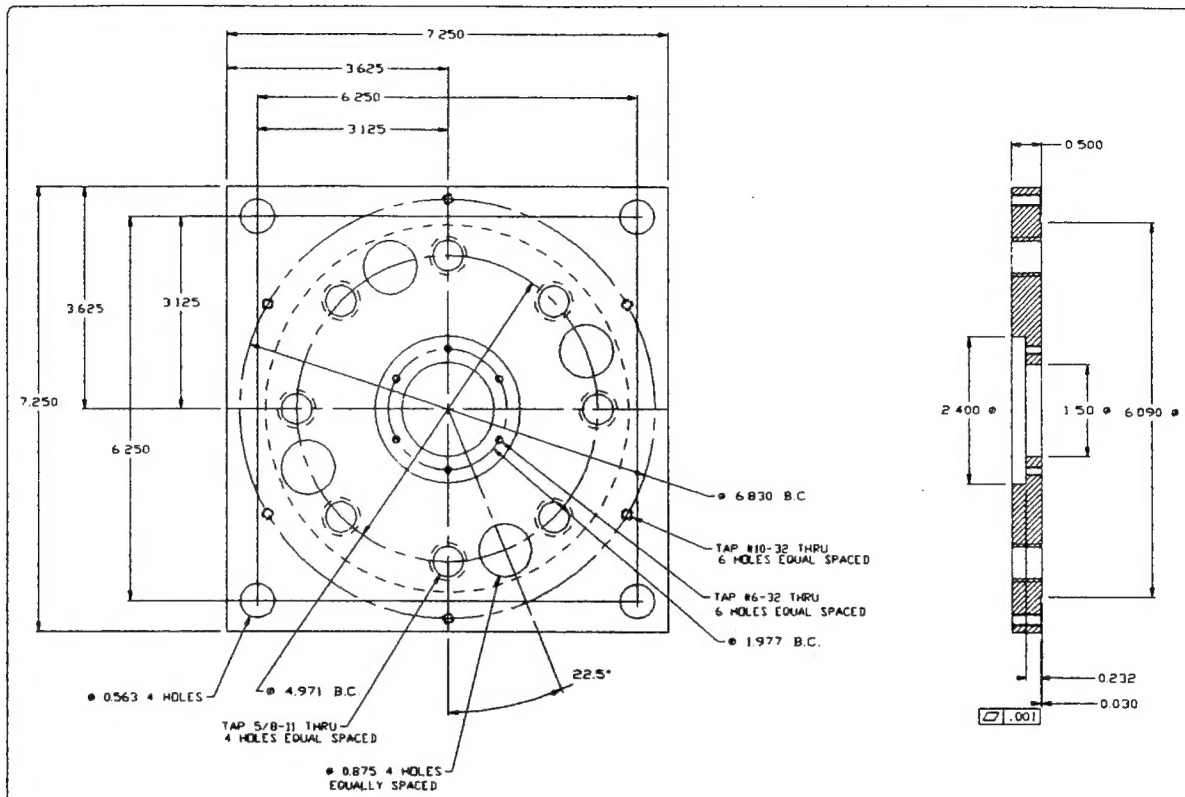

PROPRIETARY	TOLERENCES	APPROVALS	Synkinetics, Inc. 1 DeAngelo Drive Bedford, MA 01730
	UNLESS OTHERWISE SPECIFIED .XX = ±.0500 .XXX = ±.0050 .XXXX = ±.0005 ANG. = ±1/2° .005 ALL DIMENSIONS ARE IN INCHES	CUNNINGHAM 12/22/94	REAR PLATE REACTION DISK ASSY ZB SYNK DRIVE
	1001/003 NEXT ASSY	ACARVIN/PROJECTS 1001/101DAACD DWG FILE PATH	1001 PROG NO · 101D DRWG NO. · AA REV · 1/1 PAGE

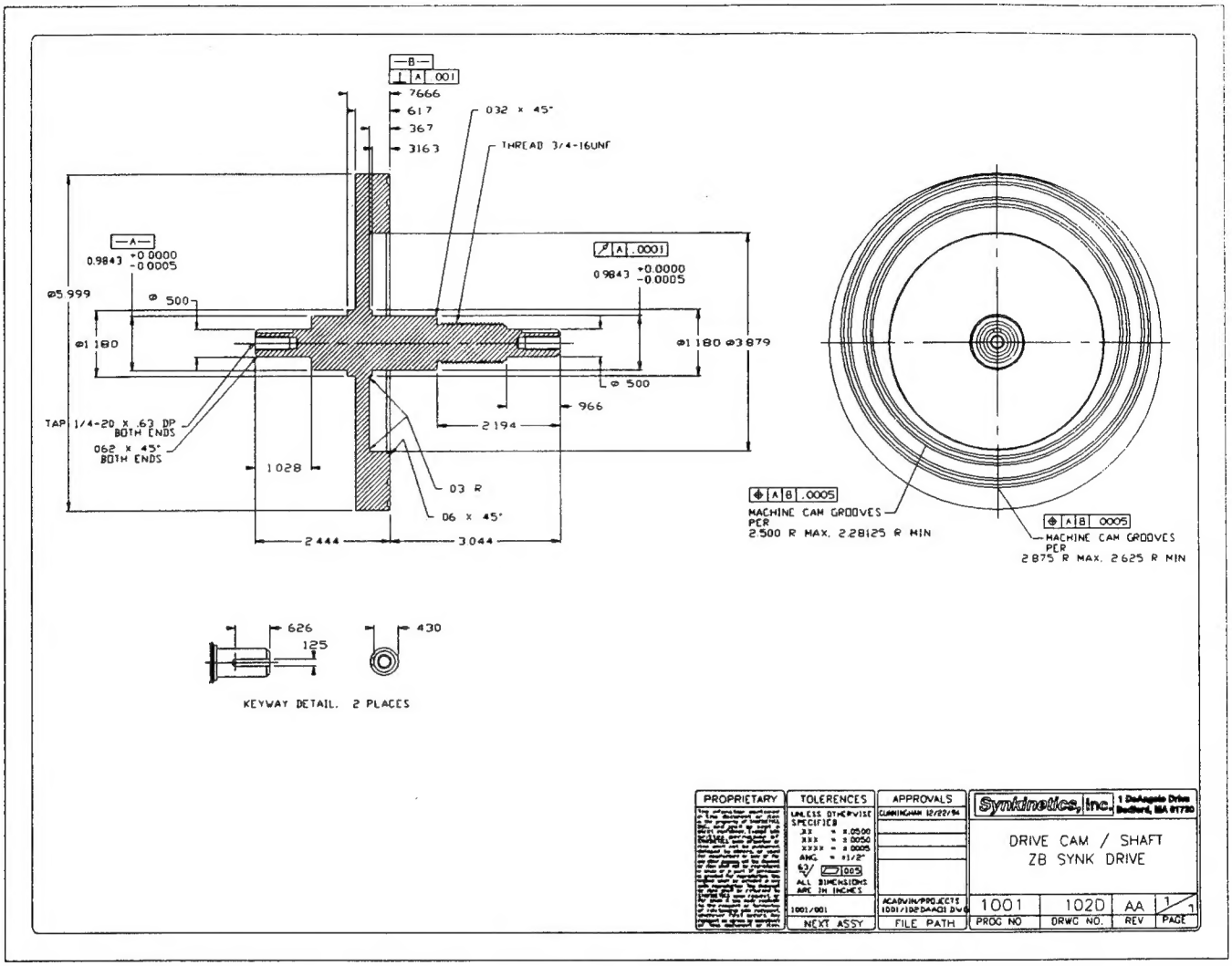
—B—
⊥ A .001
7666
617
367
3163
032 x 45°
THREAD 3/4-16UNF
—A—
0.9843 +0.0000 -0.0005
⌀ A .0001
0.9843 +0.0000 -0.0005
⌀5.999
⌀ 500
⌀1.180
⌀1.180 ⌀3.879
⌀ 500
966
2.194
TAP 1/4-20 x .63 DP BOTH ENDS
062 x 45° BOTH ENDS
1.028
03 R
06 x 45°
2.444
3.044
⌖ A B .0005
MACHINE CAM GROOVES PER 2.500 R MAX, 2.28125 R MIN
⌖ A B .0005
MACHINE CAM GROOVES PER 2.875 R MAX, 2.625 R MIN
626
125
430
KEYWAY DETAIL. 2 PLACES
PROPRIETARY
TOLERENCES
UNLESS OTHERWISE SPECIFIED
.XX = ±.0500
.XXX = ±.0050
.XXXX = ±.0005
ANG. = ±1/2°
63 ▱ .005
ALL DIMENSIONS ARE IN INCHES
1001/001
NEXT ASSY
APPROVALS
CUNNINGHAM 12/22/94
ACADVIN/PROJECTS 1001/102DAACII.DWG
FILE PATH
Synkinetics, Inc.
1 DeAngelo Drive Bedford, MA 01730
DRIVE CAM / SHAFT
ZB SYNK DRIVE
1001
PROG NO
102D
DRWG NO.
AA
REV
1/1
PAGE

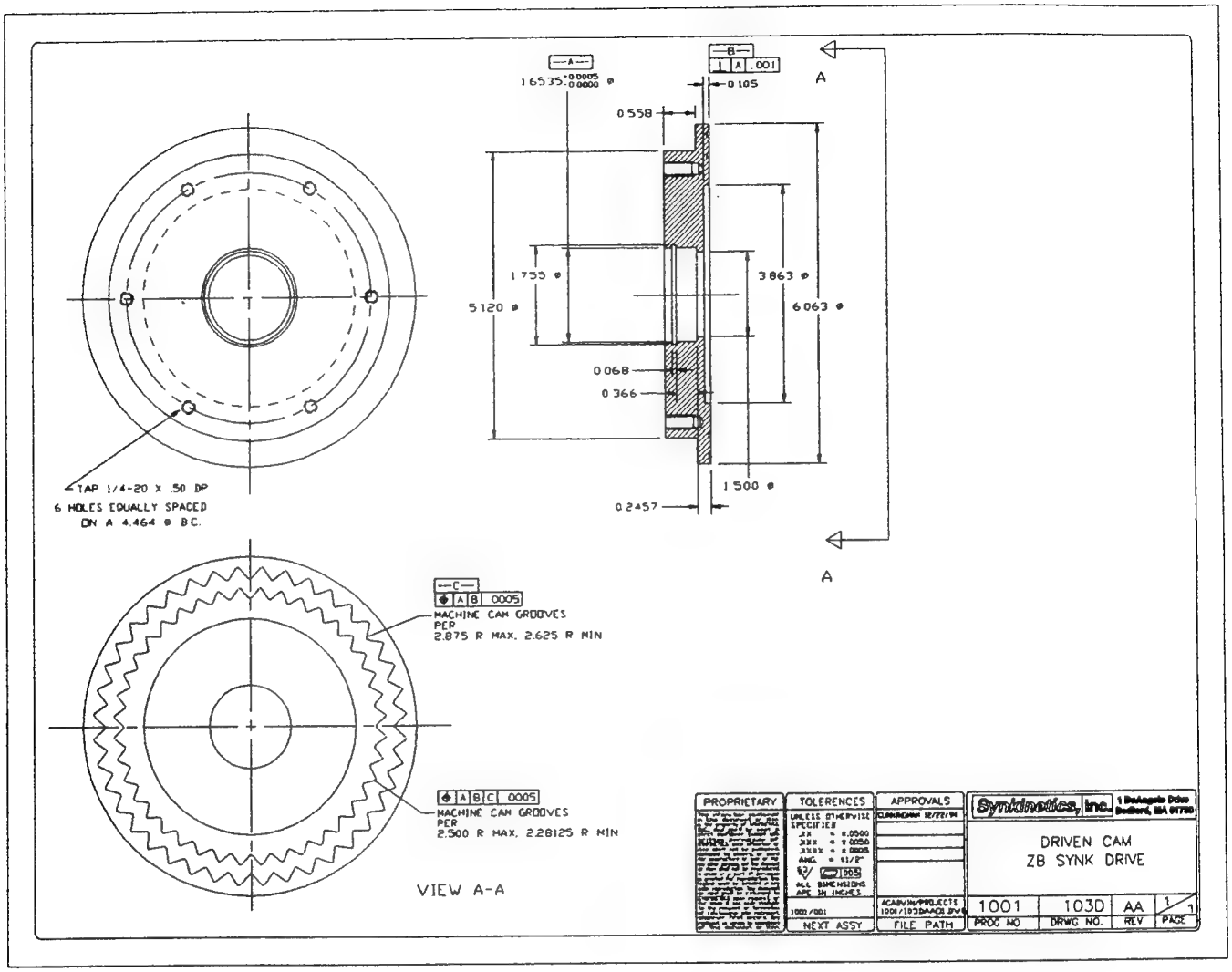

A
1.6535 +0.0005 -0.0000 ⌀
B
⊥ A .001
0.105
0.558
1.755 ⌀
5.120 ⌀
3.863 ⌀
6.063 ⌀
0.068
0.366
1.500 ⌀
0.2457
A
TAP 1/4-20 X .50 DP
6 HOLES EQUALLY SPACED
ON A 4.464 ⌀ B.C.
C
A B .0005
MACHINE CAM GROOVES
PER
2.875 R MAX, 2.625 R MIN
A B C .0005
MACHINE CAM GROOVES
PER
2.500 R MAX, 2.28125 R MIN
VIEW A-A
PROPRIETARY
TOLERENCES
UNLESS OTHERWISE SPECIFIED
.XX = ±.0500
.XXX = ±.0050
.XXXX = ±.0005
ANG. = ±1/2°
.005
ALL DIMENSIONS ARE IN INCHES
1001/001
NEXT ASSY
APPROVALS
CLAUDIEMAN 12/22/94
ACADV/M/PROJECTS
1001/103DAA03.DWG
FILE PATH
Synkinetics, Inc.
DRIVEN CAM
ZB SYNK DRIVE
1001
103D
AA
1/1
PROG NO
DRWG NO.
REV
PAGE

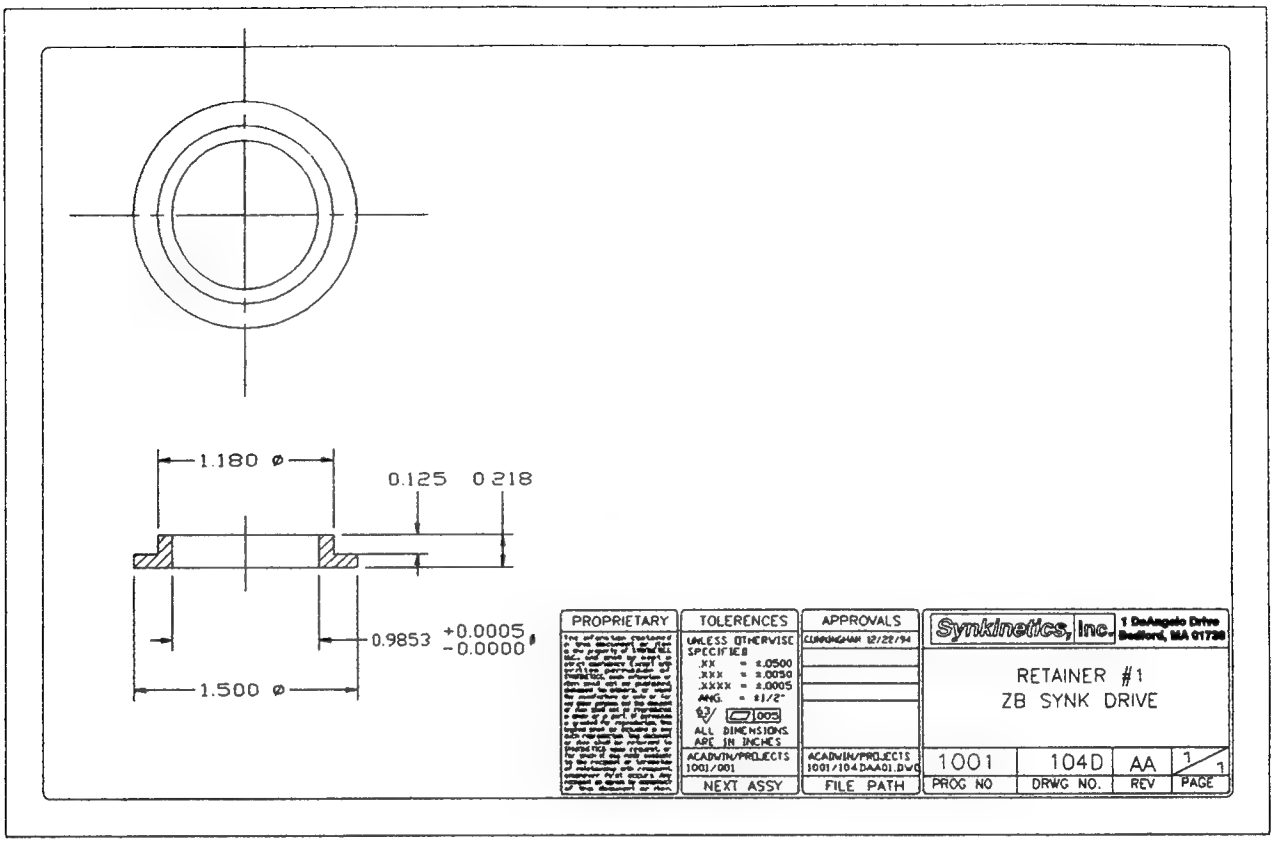
1.180 ø
0.125
0.218
0.9853 +0.0005 -0.0000
1.500 ø
PROPRIETARY
TOLERENCES
UNLESS OTHERWISE SPECIFIED
.XX = ±.0500
.XXX = ±.0050
.XXXX = ±.0005
ANG. = ±1/2°
.005
ALL DIMENSIONS ARE IN INCHES
ACADWIN/PROJECTS 1001/001
NEXT ASSY
APPROVALS
CUNNINGHAM 12/22/94
ACADWIN/PROJECTS 1001/104DAA01.DWG
FILE PATH
Synkinetics, Inc.
1 DeAngelo Drive Bedford, MA 01730
RETAINER #1
ZB SYNK DRIVE
1001
PROG NO
104D
DRWG NO.
AA
REV
1/1
PAGE

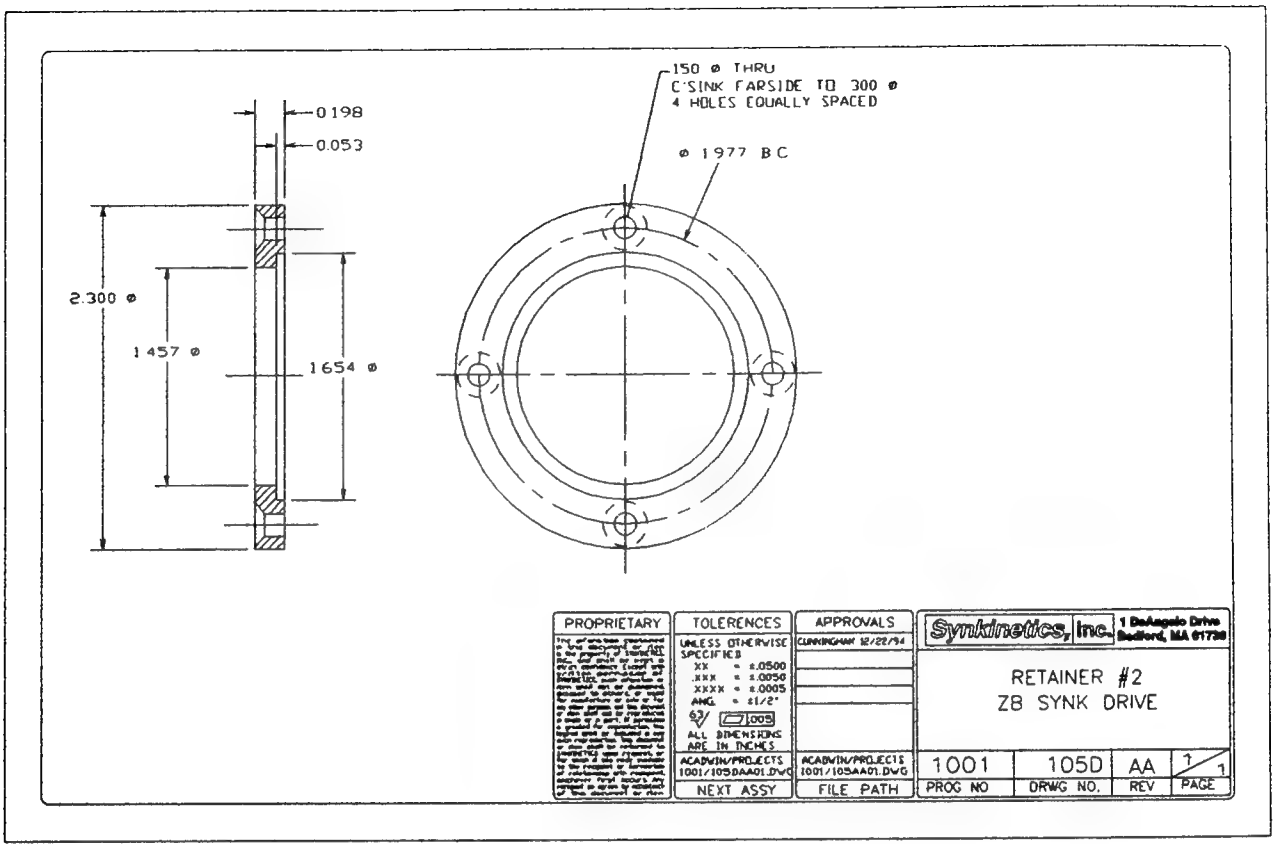
.150 ø THRU
C'SINK FARSIDE TO .300 ø
4 HOLES EQUALLY SPACED
ø 1.977 B.C.
.0198
.053
2.300 ø
1.457 ø
1.654 ø
PROPRIETARY
TOLERENCES
UNLESS OTHERWISE SPECIFIED
.XX = ±.0500
.XXX = ±.0050
.XXXX = ±.0005
ANG. = ±1/2°
.005
ALL DIMENSIONS ARE IN INCHES
ACADWIN/PROJECTS 1001/105DAA01.DWG
NEXT ASSY
APPROVALS
CUNNINGHAM 12/22/94
ACADWIN/PROJECTS 1001/105AA01.DWG
FILE PATH
Synkinetics, Inc.
1 DeAngelo Drive Bedford, MA 01730
RETAINER #2
Z8 SYNK DRIVE
1001
PROG NO
105D
DRWG NO.
AA
REV
1/1
PAGE

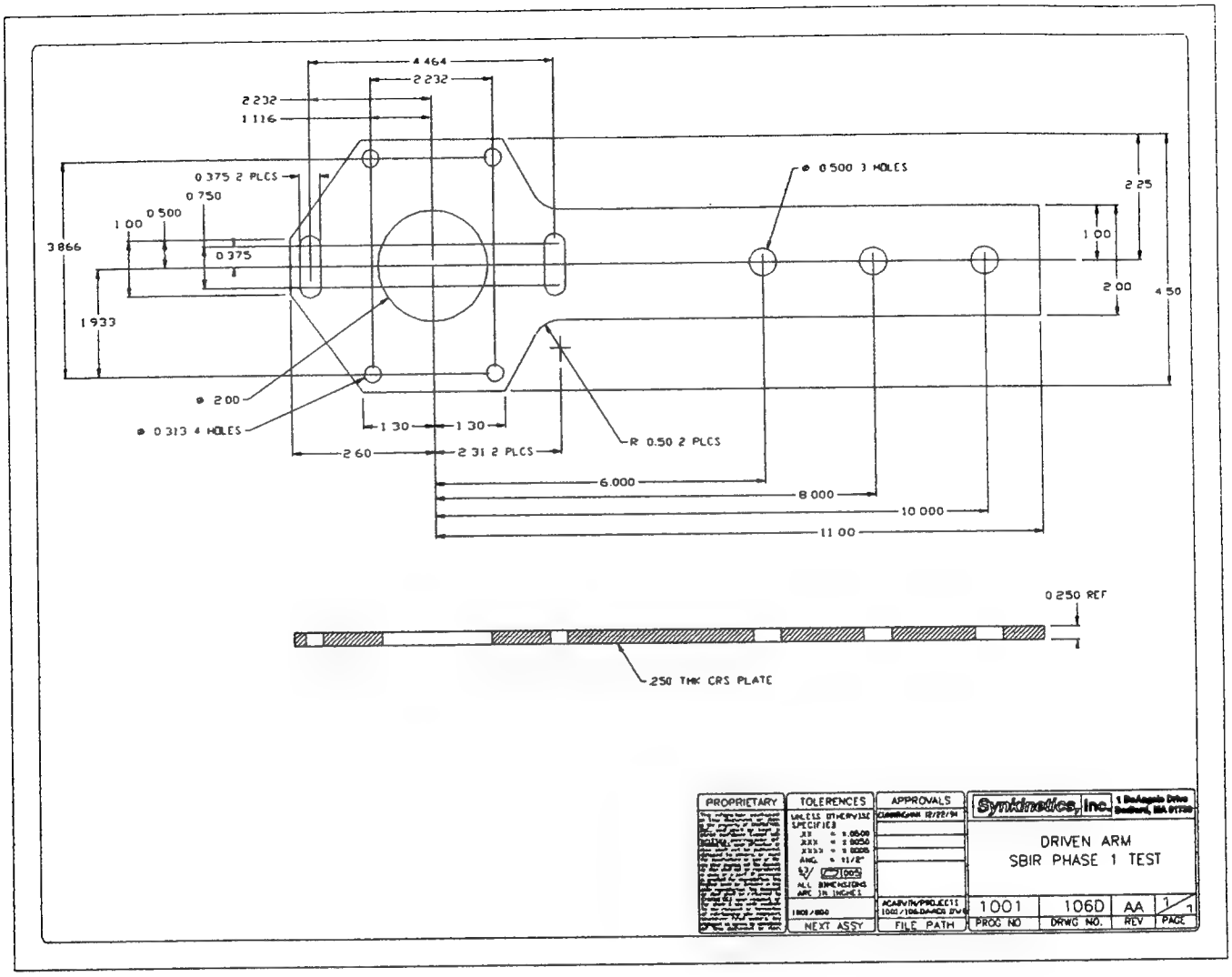
4.464
2.232
2.232
1.116
0.375 2 PLCS
0.750
0.500
1.00
0.375
3.866
1.933
ø 0.500 3 HOLES
2.25
1.00
2.00
4.50
ø 2.00
ø 0.313 4 HOLES
1.30
1.30
2.60
2.31 2 PLCS
R 0.50 2 PLCS
6.000
8.000
10.000
11.00
0.250 REF
.250 THK CRS PLATE
PROPRIETARY
TOLERENCES
UNLESS OTHERWISE SPECIFIED
ALL DIMENSIONS ARE IN INCHES
APPROVALS
Syntonics, Inc.
DRIVEN ARM
SBIR PHASE 1 TEST
1001
106D
AA
1
1
PROG NO
DRWG NO.
REV
PAGE
NEXT ASSY
FILE PATH

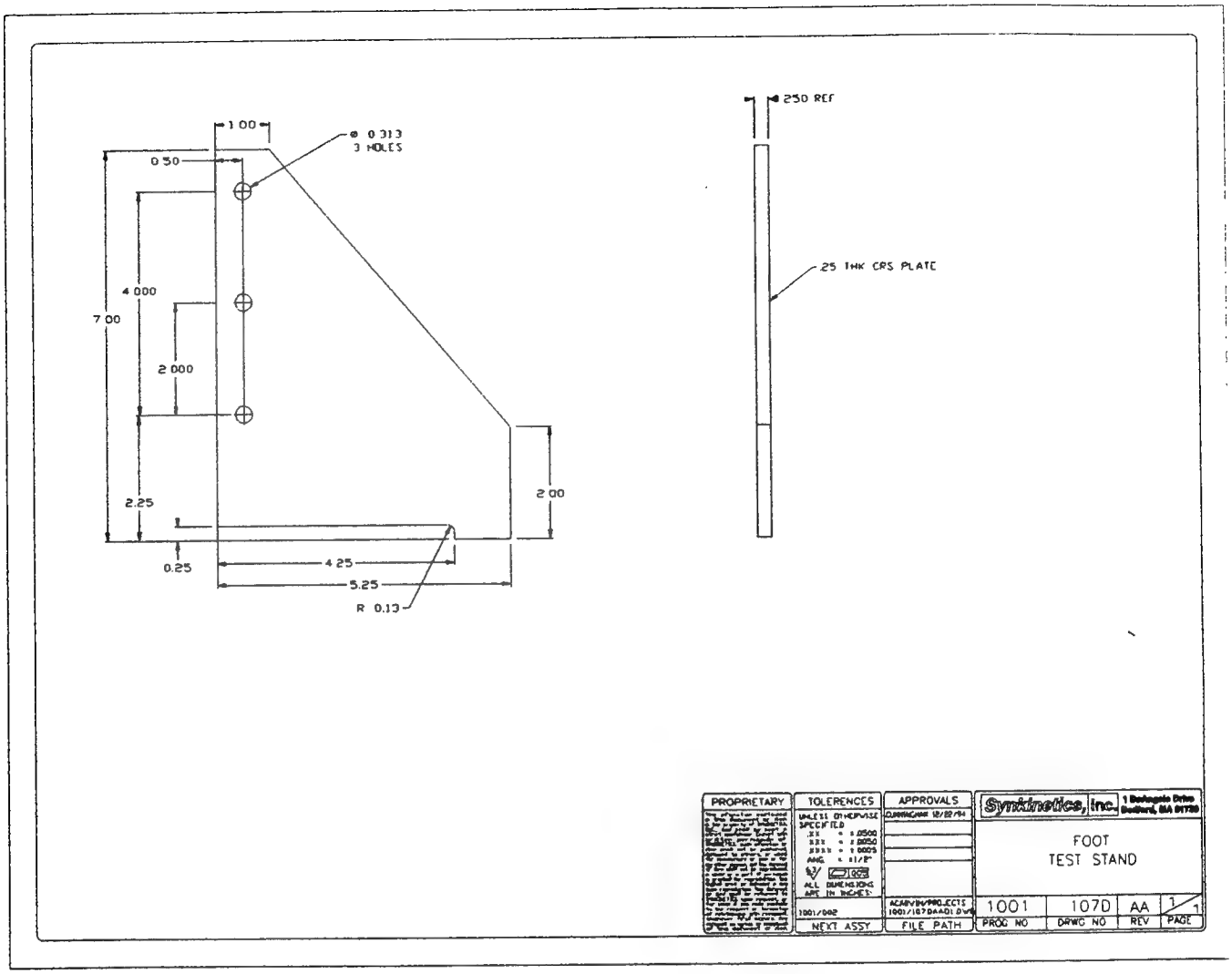
1.00
Ø 0.313
3 HOLES
0.50
4.000
7.00
2.000
2.25
0.25
4.25
5.25
R 0.13
2.00
.250 REF
.25 THK CRS PLATE
PROPRIETARY
TOLERENCES
UNLESS OTHERWISE SPECIFIED
ALL DIMENSIONS ARE IN INCHES
APPROVALS
Synkinetics, Inc.
FOOT
TEST STAND
1001
107D
AA
1/1
PROG NO
DRWG NO
REV
PAGE
NEXT ASSY
FILE PATH

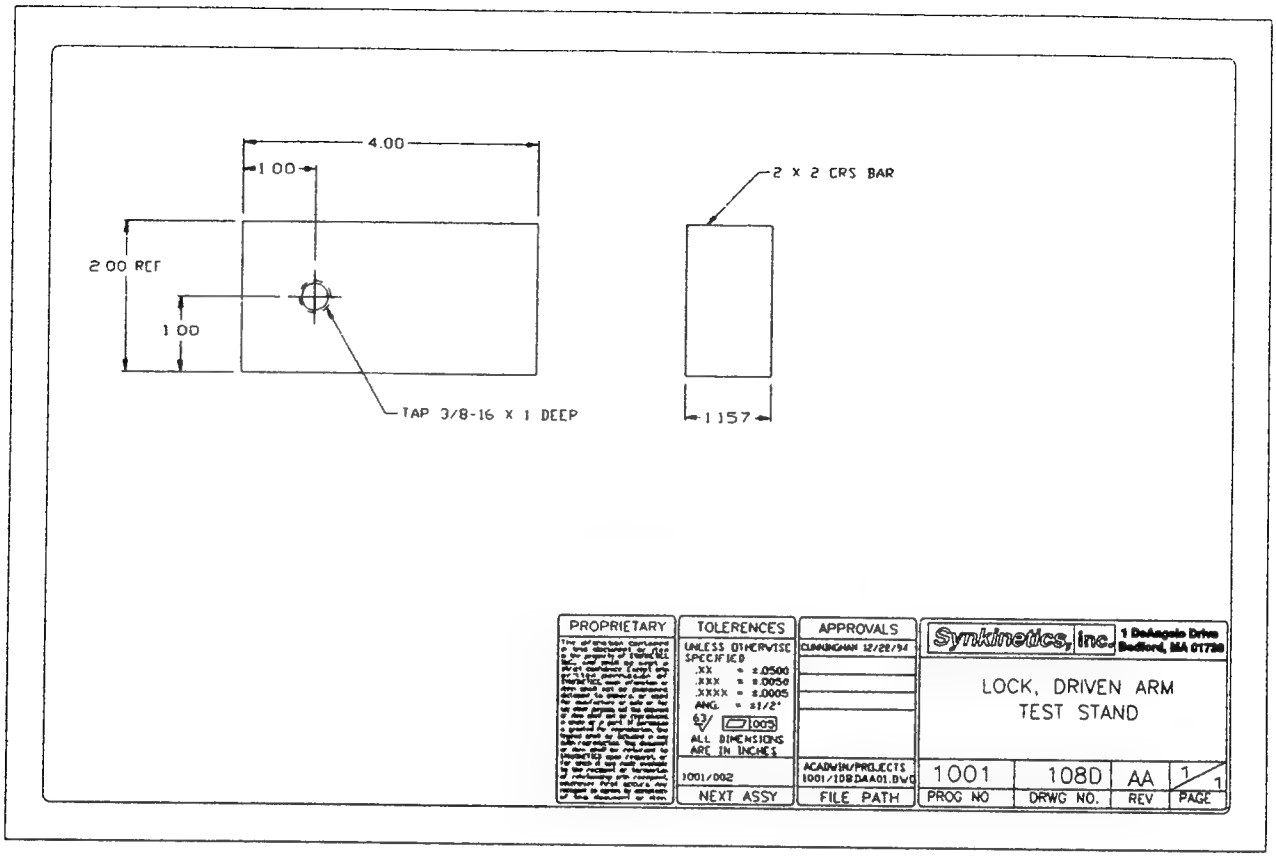
4.00
1.00
2.00 REF
1.00
TAP 3/8-16 X 1 DEEP
2 X 2 CRS BAR
1.157
PROPRIETARY
TOLERENCES
UNLESS OTHERWISE SPECIFIED
.XX = ±.0500
.XXX = ±.0050
.XXXX = ±.0005
ANG. = ±1/2°
.005
ALL DIMENSIONS ARE IN INCHES
1001/002
NEXT ASSY
APPROVALS
CUNNINGHAM 12/22/94
ACADWIN/PROJECTS 1001/108D\AA01.DWG
FILE PATH
Synkinetics, Inc.
1 DeAngelo Drive Bedford, MA 01730
LOCK, DRIVEN ARM
TEST STAND
1001
PROG NO
108D
DRWG NO.
AA
REV
1
1
PAGE

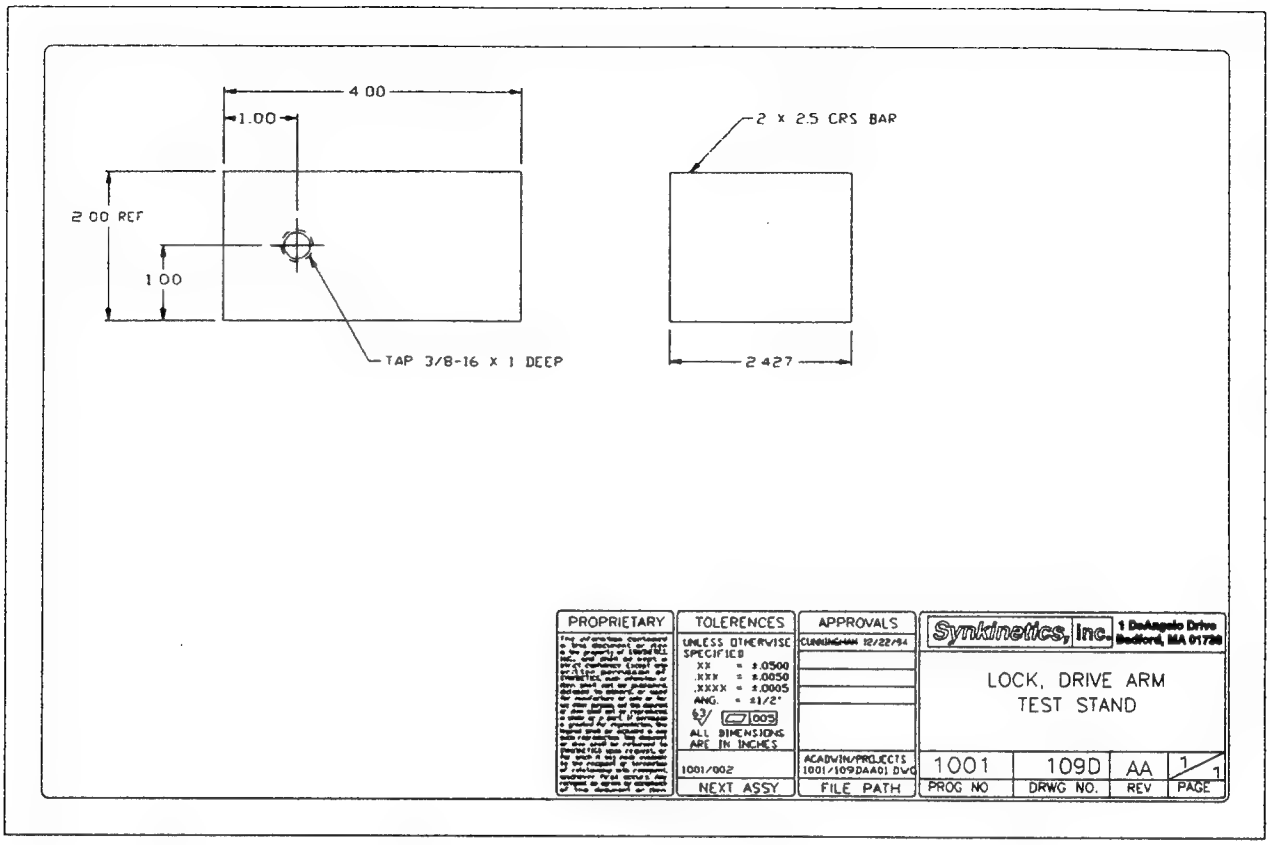
4.00
1.00
2.00 REF
1.00
TAP 3/8-16 X 1 DEEP
2 x 2.5 CRS BAR
2.427
PROPRIETARY
TOLERENCES
UNLESS OTHERWISE SPECIFIED
XX = ±.0500
.XXX = ±.0050
.XXXX = ±.0005
ANG. = ±1/2°
.005
ALL DIMENSIONS ARE IN INCHES
1001/002
NEXT ASSY
APPROVALS
CUNNINGHAM 12/22/94
ACADWIN/PROJECTS 1001/109DAA01.DWG
FILE PATH
Synkinetics, Inc.
1 DeAngelo Drive Bedford, MA 01730
LOCK, DRIVE ARM TEST STAND
1001
PROG NO
109D
DRWG NO.
AA
REV
1/1
PAGE

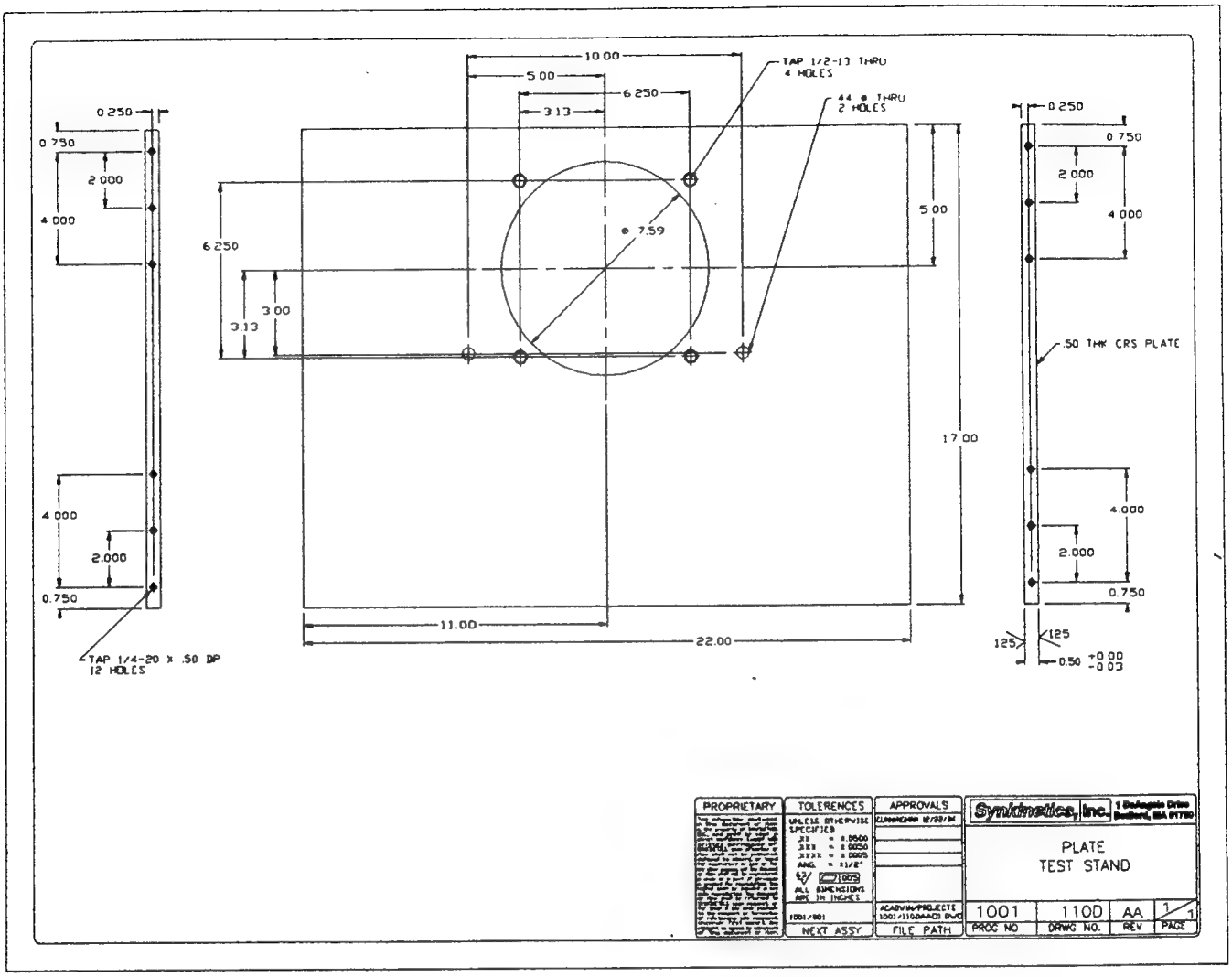
10.00
5.00
6.250
3.13
TAP 1/2-13 THRU
4 HOLES
.44 ø THRU
2 HOLES
ø 7.59
5.00
17.00
11.00
22.00
0.250
0.750
2.000
4.000
6.250
3.00
3.13
4.000
2.000
0.750
TAP 1/4-20 x .50 DP
12 HOLES
.50 THK CRS PLATE
125
0.50 +0.00 -0.03
PROPRIETARY
TOLERENCES
UNLESS OTHERWISE SPECIFIED
ALL DIMENSIONS ARE IN INCHES
APPROVALS
Synkinetics, Inc.
PLATE
TEST STAND
1001
1100
AA
1/1
PROD NO
DRWG NO.
REV
PAGE
NEXT ASSY
FILE PATH

Appendix-B: Results for 40% Flank Angle and 52% Conformity

SYNKdrive™ Speed Conversion Technology

Analytical and Numerical Results

Precision Speed Reducer for Robotics and Manufacturing (TRP-93-009)

Conforming Race Design
Conforming Percentage: 52%
Flank Angle: 40 degrees
Applied Torque: 1200 in-lbs

1.0 Geometric Definition

```
Summary of Conforming Race Parameters
-------------------------------------
BallDiameter                    = 0.15625

ConformingDiameter              = 0.1625
ConformingPercentage            = 52.

PrimaryFlankAngleDegrees        = 40.
IntermediateFlankAngleDegrees   = 0.
SecondaryFlankAngleDegrees      = 40.

PrimaryFractionBallDepth        = 0.3
SecondaryFractionBallDepth      = 0.3

ToleranceFraction               = 0.01

ContactToCornerDistance for Dp = 0.0247607
ContactToCornerDistance for Ds = 0.0247607
```

```
Summary of Primary Disk Parameters
-----------------------------------
PrimaryDiskThickness            = 0.5
PrimaryDiskDiameter             = 6.

PrimaryRadiusMax                = 2.5
PrimaryRadiusMin                = 2.28125
PrimaryDisplacement             = 0.21875

PrimaryPhiIncrement             = 180.
PrimaryNumberLobes              = 1


Summary of Intermediate Disk Parameters
---------------------------------------
IntermediateDiskThickness       = 0.0525
IntermediateDiskDiameter        = 6.

IntermediateRadiusMax           = 2.5
IntermediateRadiusMin           = 2.28125
IntermediateDisplacement        = 0.21875
IntermediateSlotWidth           = 0.15625

IntermediateTotalSlots          = 36
IntermediateGammaIncrement      = 10.


Summary of Secondary Disk Parameters
-----------------------------------
SecondaryDiskThickness          = 0.5
SecondaryDiskDiameter           = 6.

SecondaryRadiusMax              = 2.5
SecondaryRadiusMin              = 2.28125
SecondaryDisplacement           = 0.21875

SecondaryPhiIncrement           = 4.86486
SecondaryNumberLobes            = 37
```

2.0 Ball Race Section Profile

Primary and Secondary Race Profiles

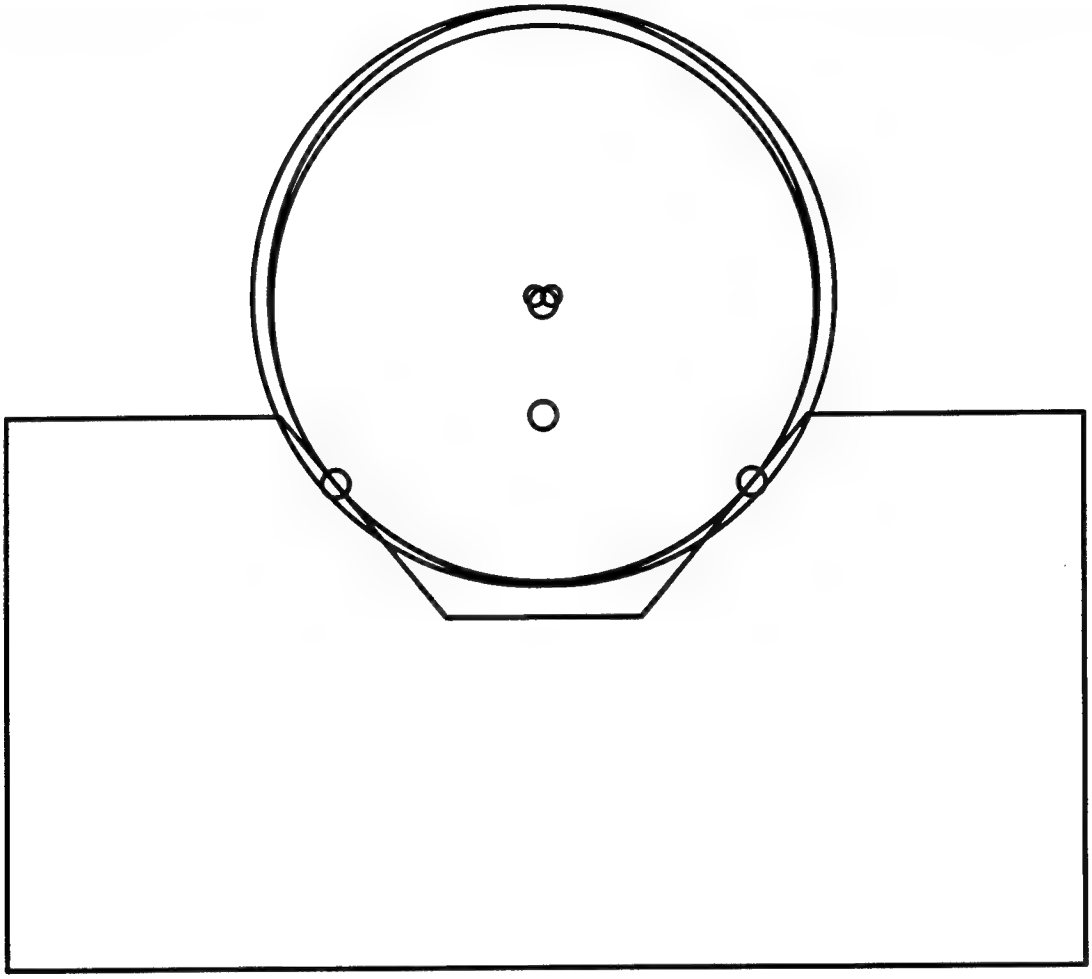

3.0 Constraints and Kinematic Results

```
Summary of Drive Constraint Parameters
--------------------------------------
PrimaryNumberLobes              = 1
SecondaryNumberLobes            = 37
IntermediateTotalSlots          = 36 (requested balls)

BallConjugateDirection          = forward drive
BallConstraintCondition         = exactly constrained

Conjugate constraints           = 36
Forward drive condition         = 36
Reverser drive condition        = 38
Predicted speed ratio           = 37 to 1


Summary of Kinematic Solver Results
-----------------------------------
PrimaryAngleStart               = 0.
PrimaryAngleFinish              = 5.
PrimaryAngleDelta               = 1.
PrimaryAngleNumber              = 6.
Speed Conversion Ratio (Dp:Ds) = 37. to 1

PrimaryDiskDeltaAngle:
   Step          Dp Angle          Ds Angle
   ----          --------          --------
                                           -17
    1              0.              2.77556 10
    2              1.              0.027027
    3              2.              0.0540541
    4              3.              0.0810811
    5              4.              0.108108
    6              5.              0.135135
```

4.0 Numerical Results

```
================================================
Summary of Stress and Displacement Calculations
================================================
 Calculated for kinematic solution : 6
 Angular Deformation               : 0.395194
 Applied Torque                    : 1200.
```

```
=========================
 Ball number          : 1
 Ball angle           : 350.
 Ball position        : {-0.21683, 2.47838, 0.}
 Solution current?    : Yes
 Ball activity        : ON
 Ball request         : solve
 Cross over angle          : 37.2375
 Residual Force Vector     : {0.503809, 0.29151, -0.14441}
                                          -6
 Displacement Residual     : 2.39583 10
****
 Contact name              : DpCo
  Max Normal Load          : 19.8801
  Max Normal Stress        : -224625.
  Displacement             : 0.000118592
  Contact a-length         : 0.0187847
  Contact b-length         : 0.00228422
  Contact area             : 0.000134801
  Distance to Corner       : 0.00597596
  Effective Speed Factor   : 2.659
  Load-Life Factor         : 10.7002
                                        7
  Expected Average Life    : 4.98132 10
****
 Contact name              : DiCi
  Max Normal Load          : 14.9633
  Max Normal Stress        : -201057.
  Displacement             : 0.0000950073
  Contact a-length         : 0.0168134
  Contact b-length         : 0.00204444
  Contact area             : 0.000107989
  Distance to Corner: Dp   : 0.00943658
  Distance to Corner: Ds   : 0.00943658
  Effective Speed Factor   : 2.659
  Load-Life Factor         : 14.2161
                                        8
  Expected Average Life    : 1.55205 10
****
 Contact name              : DsCi
  Max Normal Load          : 24.1761
  Max Normal Stress        : -238811.
  Displacement             : 0.000134022
  Contact a-length         : 0.0199695
  Contact b-length         : 0.00242802
  Contact area             : 0.000152324
  Distance to Corner       : 0.00479119
  Effective Speed Factor   : 2.659
  Load-Life Factor         : 8.79877
                                        7
  Expected Average Life    : 2.27756 10
```

```
=========================
 Ball number          : 2
 Ball angle           : 340.
 Ball position        : {-0.640757, 2.39134, 0.}
 Solution current?    : Yes
 Ball activity        : ON
 Ball request         : solve
 Cross over angle         : 37.3348
 Residual Force Vector    : {0.435179, 0.371096, -0.145469}
                                        -6
 Displacement Residual    : 2.35975 10
****
 Contact name             : DpCo
  Max Normal Load         : 19.8138
  Max Normal Stress       : -224371.
  Displacement            : 0.000118324
  Contact a-length        : 0.0187635
  Contact b-length        : 0.00228164
  Contact area            : 0.000134496
  Distance to Corner      : 0.00599721
  Effective Speed Factor  : 2.659
  Load-Life Factor        : 10.7359
                                      7
  Expected Average Life   : 5.0483 10
****
 Contact name             : DiCi
  Max Normal Load         : 14.9524
  Max Normal Stress       : -201048.
  Displacement            : 0.0000949982
  Contact a-length        : 0.0168126
  Contact b-length        : 0.00204434
  Contact area            : 0.000107979
  Distance to Corner: Dp  : 0.00943738
  Distance to Corner: Ds  : 0.00943738
  Effective Speed Factor  : 2.659
  Load-Life Factor        : 14.2265
                                      8
  Expected Average Life   : 1.55658 10
****
 Contact name             : DsCi
  Max Normal Load         : 24.1244
  Max Normal Stress       : -238629.
  Displacement            : 0.000133819
  Contact a-length        : 0.0199543
  Contact b-length        : 0.00242618
  Contact area            : 0.000152093
  Distance to Corner      : 0.00480638
  Effective Speed Factor  : 2.659
  Load-Life Factor        : 8.81762
                                      7
  Expected Average Life   : 2.29715 10
```

```
=========================
 Ball number          : 3
 Ball angle           : 330.
 Ball position        : {-1.04114, 2.23273, 0.}
 Solution current?    : Yes
 Ball activity        : ON
 Ball request         : solve
 Cross over angle          : 37.4324
 Residual Force Vector     : {0.354572, 0.435769, -0.146485}
                                                  -6
 Displacement Residual     : 2.32368 10
****
 Contact name              : DpCo
  Max Normal Load          : 19.7473
  Max Normal Stress        : -224115.
  Displacement             : 0.000118054
  Contact a-length         : 0.0187421
  Contact b-length         : 0.00227904
  Contact area             : 0.00013419
  Distance to Corner       : 0.00601858
  Effective Speed Factor   : 2.659
  Load-Life Factor         : 10.7721
                                       7
  Expected Average Life    : 5.11662 10
****
 Contact name              : DiCi
  Max Normal Load          : 14.9413
  Max Normal Stress        : -201037.
  Displacement             : 0.0000949882
  Contact a-length         : 0.0168117
  Contact b-length         : 0.00204424
  Contact area             : 0.000107968
  Distance to Corner: Dp   : 0.00943827
  Distance to Corner: Ds   : 0.00943827
  Effective Speed Factor   : 2.659
  Load-Life Factor         : 14.237
                                       8
  Expected Average Life    : 1.56121 10
****
 Contact name              : DsCi
  Max Normal Load          : 24.0725
  Max Normal Stress        : -238446.
  Displacement             : 0.000133614
  Contact a-length         : 0.019939
  Contact b-length         : 0.00242432
  Contact area             : 0.00015186
  Distance to Corner       : 0.00482167
  Effective Speed Factor   : 2.659
  Load-Life Factor         : 8.83665
                                       7
  Expected Average Life    : 2.31705 10
```

```
==========================
 Ball number          : 4
 Ball angle           : 320.
 Ball position        : {-1.40606, 2.00806, 0.}
 Solution current?    : Yes
 Ball activity        : ON
 Ball request         : solve
 Cross over angle          : 37.5304
 Residual Force Vector     : {0.265063, 0.48385, -0.147457}
                                                  -6
 Displacement Residual     : 2.28764 10
****
 Contact name              : DpCo
  Max Normal Load          : 19.6806
  Max Normal Stress        : -223858.
  Displacement             : 0.000117784
  Contact a-length         : 0.0187206
  Contact b-length         : 0.00227643
  Contact area             : 0.000133882
  Distance to Corner       : 0.00604008
  Effective Speed Factor   : 2.659
  Load-Life Factor         : 10.8086
                                        7
  Expected Average Life    : 5.18632 10
****
 Contact name              : DiCi
  Max Normal Load          : 14.93
  Max Normal Stress        : -201026.
  Displacement             : 0.0000949772
  Contact a-length         : 0.0168108
  Contact b-length         : 0.00204412
  Contact area             : 0.000107955
  Distance to Corner: Dp   : 0.00943924
  Distance to Corner: Ds   : 0.00943924
  Effective Speed Factor   : 2.659
  Load-Life Factor         : 14.2478
                                        8
  Expected Average Life    : 1.56594 10
****
 Contact name              : DsCi
  Max Normal Load          : 24.0202
  Max Normal Stress        : -238262.
  Displacement             : 0.000133408
  Contact a-length         : 0.0199236
  Contact b-length         : 0.00242245
  Contact area             : 0.000151626
  Distance to Corner       : 0.00483704
  Effective Speed Factor   : 2.659
  Load-Life Factor         : 8.85587
                                        7
  Expected Average Life    : 2.33727 10
```

```
=========================
 Ball number          : 5
 Ball angle           : 310.
 Ball position        : {-1.7248, 1.7248, 0.}
 Solution current?    : Yes
 Ball activity        : ON
 Ball request         : solve
 Cross over angle          : 37.6288
 Residual Force Vector     : {0.16994, 0.514271, -0.148384}
                                      -6
 Displacement Residual     : 2.25163 10
****
 Contact name              : DpCo
  Max Normal Load          : 19.6138
  Max Normal Stress        : -223600.
  Displacement             : 0.000117512
  Contact a-length         : 0.018699
  Contact b-length         : 0.0022738
  Contact area             : 0.000133573
  Distance to Corner       : 0.0060617
  Effective Speed Factor   : 2.659
  Load-Life Factor         : 10.8454
                                       7
  Expected Average Life    : 5.25743 10
****
 Contact name              : DiCi
  Max Normal Load          : 14.9185
  Max Normal Stress        : -201013.
  Displacement             : 0.0000949653
  Contact a-length         : 0.0168097
  Contact b-length         : 0.00204399
  Contact area             : 0.000107942
  Distance to Corner: Dp   : 0.00944029
  Distance to Corner: Ds   : 0.00944029
  Effective Speed Factor   : 2.659
  Load-Life Factor         : 14.2588
                                       8
  Expected Average Life    : 1.57077 10
****
 Contact name              : DsCi
  Max Normal Load          : 23.9677
  Max Normal Stress        : -238077.
  Displacement             : 0.000133201
  Contact a-length         : 0.0199082
  Contact b-length         : 0.00242057
  Contact area             : 0.00015139
  Distance to Corner       : 0.00485251
  Effective Speed Factor   : 2.659
  Load-Life Factor         : 8.87527
                                       7
  Expected Average Life    : 2.35782 10
```

```
==========================
 Ball number          : 6
 Ball angle           : 300.
 Ball position        : {-1.98815, 1.39212, 0.}
 Solution current?    : Yes
 Ball activity        : ON
 Ball request         : solve
 Cross over angle          : 37.7277
 Residual Force Vector     : {0.0725791, 0.526594, -0.149265}
                                          -6
 Displacement Residual     : 2.21565 10
****
 Contact name              : DpCo
  Max Normal Load          : 19.5467
  Max Normal Stress        : -223340.
  Displacement             : 0.000117239
  Contact a-length         : 0.0186772
  Contact b-length         : 0.00227115
  Contact area             : 0.000133263
  Distance to Corner       : 0.00608345
  Effective Speed Factor   : 2.659
  Load-Life Factor         : 10.8827
                                      7
  Expected Average Life    : 5.32997 10
****
 Contact name              : DiCi
  Max Normal Load          : 14.9068
  Max Normal Stress        : -200999.
  Displacement             : 0.0000949525
  Contact a-length         : 0.0168086
  Contact b-length         : 0.00204385
  Contact area             : 0.000107927
  Distance to Corner: Dp   : 0.00944143
  Distance to Corner: Ds   : 0.00944143
  Effective Speed Factor   : 2.659
  Load-Life Factor         : 14.27
                                        8
  Expected Average Life    : 1.5757 10
****
 Contact name              : DsCi
  Max Normal Load          : 23.9149
  Max Normal Stress        : -237891.
  Displacement             : 0.000132992
  Contact a-length         : 0.0198926
  Contact b-length         : 0.00241868
  Contact area             : 0.000151154
  Distance to Corner       : 0.00486807
  Effective Speed Factor   : 2.659
  Load-Life Factor         : 8.89487
                                      7
  Expected Average Life    : 2.37871 10
```

```
==========================
 Ball number          : 7
 Ball angle           : 290.
 Ball position        : {-2.18867, 1.02059, 0.}
 Solution current?    : Yes
 Ball activity        : ON
 Ball request         : solve
 Cross over angle          : 37.8269
 Residual Force Vector     : {-0.0236712, 0.521014, -0.150101}
                                        -6
 Displacement Residual     : 2.17969 10
****
 Contact name              : DpCo
  Max Normal Load          : 19.4794
  Max Normal Stress        : -223078.
  Displacement             : 0.000116964
  Contact a-length         : 0.0186554
  Contact b-length         : 0.00226849
  Contact area             : 0.000132951
  Distance to Corner       : 0.00610533
  Effective Speed Factor   : 2.659
  Load-Life Factor         : 10.9203
                                    7
  Expected Average Life    : 5.404 10
****
 Contact name              : DiCi
  Max Normal Load          : 14.8949
  Max Normal Stress        : -200985.
  Displacement             : 0.0000949387
  Contact a-length         : 0.0168074
  Contact b-length         : 0.0020437
  Contact area             : 0.000107911
  Distance to Corner: Dp   : 0.00944265
  Distance to Corner: Ds   : 0.00944265
  Effective Speed Factor   : 2.659
  Load-Life Factor         : 14.2814
                                      8
  Expected Average Life    : 1.58075 10
****
 Contact name              : DsCi
  Max Normal Load          : 23.8619
  Max Normal Stress        : -237704.
  Displacement             : 0.000132783
  Contact a-length         : 0.019877
  Contact b-length         : 0.00241677
  Contact area             : 0.000150916
  Distance to Corner       : 0.00488373
  Effective Speed Factor   : 2.659
  Load-Life Factor         : 8.91465
                                    7
  Expected Average Life    : 2.39994 10
```

```
=========================
 Ball number          : 8
 Ball angle           : 280.
 Ball position        : {-2.32091, 0.621885, 0.}
 Solution current?    : Yes
 Ball activity        : ON
 Ball request         : solve
 Cross over angle          : 37.9266
 Residual Force Vector     : {-0.115604, 0.498326, -0.150889}
                                                  -6
 Displacement Residual     : 2.14377 10
****
 Contact name              : DpCo
  Max Normal Load          : 19.4119
  Max Normal Stress        : -222815.
  Displacement             : 0.000116688
  Contact a-length         : 0.0186333
  Contact b-length         : 0.00226581
  Contact area             : 0.000132637
  Distance to Corner       : 0.00612733
  Effective Speed Factor   : 2.659
  Load-Life Factor         : 10.9582
                                        7
  Expected Average Life    : 5.47954 10
****
 Contact name              : DiCi
  Max Normal Load          : 14.8828
  Max Normal Stress        : -200969.
  Displacement             : 0.000094924
  Contact a-length         : 0.016806
  Contact b-length         : 0.00204355
  Contact area             : 0.000107895
  Distance to Corner: Dp   : 0.00944396
  Distance to Corner: Ds   : 0.00944396
  Effective Speed Factor   : 2.659
  Load-Life Factor         : 14.293
                                        8
  Expected Average Life    : 1.5859 10
****
 Contact name              : DsCi
  Max Normal Load          : 23.8085
  Max Normal Stress        : -237516.
  Displacement             : 0.000132573
  Contact a-length         : 0.0198612
  Contact b-length         : 0.00241486
  Contact area             : 0.000150677
  Distance to Corner       : 0.00489948
  Effective Speed Factor   : 2.659
  Load-Life Factor         : 8.93462
                                        7
  Expected Average Life    : 2.42152 10
```

```
==========================
 Ball number          : 9
 Ball angle           : 270.
 Ball position        : {-2.38153, 0.208357, 0.}
 Solution current?    : Yes
 Ball activity        : ON
 Ball request         : solve
 Cross over angle          : 38.0267
 Residual Force Vector     : {-0.200263, 0.459886, -0.151629}
                                                  -6
 Displacement Residual     : 2.10788 10
****
 Contact name              : DpCo
  Max Normal Load          : 19.3442
  Max Normal Stress        : -222551.
  Displacement             : 0.000116411
  Contact a-length         : 0.0186112
  Contact b-length         : 0.00226312
  Contact area             : 0.000132322
  Distance to Corner       : 0.00614947
  Effective Speed Factor   : 2.659
  Load-Life Factor         : 10.9966
                                      7
  Expected Average Life    : 5.55663 10
****
 Contact name              : DiCi
  Max Normal Load          : 14.8705
  Max Normal Stress        : -200953.
  Displacement             : 0.0000949082
  Contact a-length         : 0.0168047
  Contact b-length         : 0.00204338
  Contact area             : 0.000107877
  Distance to Corner: Dp   : 0.00944535
  Distance to Corner: Ds   : 0.00944535
  Effective Speed Factor   : 2.659
  Load-Life Factor         : 14.3048
                                      8
  Expected Average Life    : 1.59116 10
****
 Contact name              : DsCi
  Max Normal Load          : 23.7549
  Max Normal Stress        : -237326.
  Displacement             : 0.000132361
  Contact a-length         : 0.0198454
  Contact b-length         : 0.00241293
  Contact area             : 0.000150437
  Distance to Corner       : 0.00491532
  Effective Speed Factor   : 2.659
  Load-Life Factor         : 8.95479
                                      7
  Expected Average Life    : 2.44346 10
```

```
=========================
 Ball number          : 10
 Ball angle           : 260.
 Ball position        : {-2.36942, -0.207298, 0.}
 Solution current?    : Yes
 Ball activity        : ON
 Ball request         : solve
 Cross over angle          : 38.1272
 Residual Force Vector     : {-0.275033, 0.407548, -0.15232}
                                                  -6
 Displacement Residual     : 2.07203 10
****
 Contact name              : DpCo
  Max Normal Load          : 19.2763
  Max Normal Stress        : -222284.
  Displacement             : 0.000116133
  Contact a-length         : 0.0185889
  Contact b-length         : 0.00226042
  Contact area             : 0.000132006
  Distance to Corner       : 0.00617173
  Effective Speed Factor   : 2.659
  Load-Life Factor         : 11.0353
                                       7
  Expected Average Life    : 5.63531 10
****
 Contact name              : DiCi
  Max Normal Load          : 14.858
  Max Normal Stress        : -200935.
  Displacement             : 0.0000948915
  Contact a-length         : 0.0168032
  Contact b-length         : 0.0020432
  Contact area             : 0.000107858
  Distance to Corner: Dp   : 0.00944683
  Distance to Corner: Ds   : 0.00944683
  Effective Speed Factor   : 2.659
  Load-Life Factor         : 14.3169
                                       8
  Expected Average Life    : 1.59653 10
****
 Contact name              : DsCi
  Max Normal Load          : 23.701
  Max Normal Stress        : -237136.
  Displacement             : 0.000132149
  Contact a-length         : 0.0198294
  Contact b-length         : 0.00241099
  Contact area             : 0.000150195
  Distance to Corner       : 0.00493126
  Effective Speed Factor   : 2.659
  Load-Life Factor         : 8.97516
                                       7
  Expected Average Life    : 2.46577 10
```

```
=========================
 Ball number          : 11
 Ball angle           : 250.
 Ball position        : {-2.28569, -0.612449, 0.}
 Solution current?    : Yes
 Ball activity        : ON
 Ball request         : solve
 Cross over angle          : 38.2281
 Residual Force Vector     : {-0.337724, 0.343581, -0.152961}
                                          -6
 Displacement Residual     : 2.03622 10
****
 Contact name              : DpCo
  Max Normal Load          : 19.2083
  Max Normal Stress        : -222017.
  Displacement             : 0.000115853
  Contact a-length         : 0.0185666
  Contact b-length         : 0.00225769
  Contact area             : 0.000131688
  Distance to Corner       : 0.00619413
  Effective Speed Factor   : 2.659
  Load-Life Factor         : 11.0744
                                        7
  Expected Average Life    : 5.71562 10
****
 Contact name              : DiCi
  Max Normal Load          : 14.8453
  Max Normal Stress        : -200916.
  Displacement             : 0.0000948738
  Contact a-length         : 0.0168016
  Contact b-length         : 0.00204301
  Contact area             : 0.000107838
  Distance to Corner: Dp   : 0.00944839
  Distance to Corner: Ds   : 0.00944839
  Effective Speed Factor   : 2.659
  Load-Life Factor         : 14.3292
                                        8
  Expected Average Life    : 1.60202 10
****
 Contact name              : DsCi
  Max Normal Load          : 23.6468
  Max Normal Stress        : -236944.
  Displacement             : 0.000131935
  Contact a-length         : 0.0198134
  Contact b-length         : 0.00240904
  Contact area             : 0.000149952
  Distance to Corner       : 0.00494729
  Effective Speed Factor   : 2.659
  Load-Life Factor         : 8.99573
                                        7
  Expected Average Life    : 2.48845 10
```

```
=========================
 Ball number          : 12
 Ball angle           : 240.
 Ball position        : {-2.1336, -0.994914, 0.}
 Solution current?    : Yes
 Ball activity        : ON
 Ball request         : solve
 Cross over angle          : 38.3294
 Residual Force Vector     : {-0.386636, 0.270583, -0.153551}
                                          -6
 Displacement Residual     : 2.00045 10
****
 Contact name              : DpCo
  Max Normal Load          : 19.14
  Max Normal Stress        : -221747.
  Displacement             : 0.000115572
  Contact a-length         : 0.018544
  Contact b-length         : 0.00225495
  Contact area             : 0.000131369
  Distance to Corner       : 0.00621665
  Effective Speed Factor   : 2.659
  Load-Life Factor         : 11.1139
                                       7
  Expected Average Life    : 5.7976 10
****
 Contact name              : DiCi
  Max Normal Load          : 14.8323
  Max Normal Stress        : -200896.
  Displacement             : 0.0000948551
  Contact a-length         : 0.0168
  Contact b-length         : 0.0020428
  Contact area             : 0.000107816
  Distance to Corner: Dp   : 0.00945005
  Distance to Corner: Ds   : 0.00945005
  Effective Speed Factor   : 2.659
  Load-Life Factor         : 14.3417
                                       8
  Expected Average Life    : 1.60762 10
****
 Contact name              : DsCi
  Max Normal Load          : 23.5923
  Max Normal Stress        : -236751.
  Displacement             : 0.000131721
  Contact a-length         : 0.0197973
  Contact b-length         : 0.00240708
  Contact area             : 0.000149708
  Distance to Corner       : 0.00496342
  Effective Speed Factor   : 2.659
  Load-Life Factor         : 9.0165
                                       7
  Expected Average Life    : 2.51151 10
```

```
==========================
 Ball number          : 13
 Ball angle           : 230.
 Ball position        : {-1.91847, -1.34332, 0.}
 Solution current?    : Yes
 Ball activity        : ON
 Ball request         : solve
 Cross over angle          : 38.4311
 Residual Force Vector     : {-0.420598, 0.191376, -0.15409}
                                        -6
 Displacement Residual     : 1.96472 10
****
 Contact name              : DpCo
  Max Normal Load          : 19.0715
  Max Normal Stress        : -221476.
  Displacement             : 0.00011529
  Contact a-length         : 0.0185214
  Contact b-length         : 0.0022522
  Contact area             : 0.000131048
  Distance to Corner       : 0.00623931
  Effective Speed Factor   : 2.659
  Load-Life Factor         : 11.1538
                                      7
  Expected Average Life    : 5.8813 10
****
 Contact name              : DiCi
  Max Normal Load          : 14.8191
  Max Normal Stress        : -200875.
  Displacement             : 0.0000948354
  Contact a-length         : 0.0167982
  Contact b-length         : 0.00204259
  Contact area             : 0.000107794
  Distance to Corner: Dp   : 0.0094518
  Distance to Corner: Ds   : 0.0094518
  Effective Speed Factor   : 2.659
  Load-Life Factor         : 14.3544
                                      8
  Expected Average Life    : 1.61333 10
****
 Contact name              : DsCi
  Max Normal Load          : 23.5375
  Max Normal Stress        : -236557.
  Displacement             : 0.000131505
  Contact a-length         : 0.019781
  Contact b-length         : 0.00240511
  Contact area             : 0.000149463
  Distance to Corner       : 0.00497965
  Effective Speed Factor   : 2.659
  Load-Life Factor         : 9.03748
                                      7
  Expected Average Life    : 2.53497 10
```

```
=========================
 Ball number          : 14
 Ball angle           : 220.
 Ball position        : {-1.64746, -1.64746, 0.}
 Solution current?    : Yes
 Ball activity        : ON
 Ball request         : solve
 Cross over angle          : 38.5333
 Residual Force Vector     : {-0.438999, 0.108905, -0.154576}
                                                  -6
 Displacement Residual     : 1.92904 10
****
 Contact name              : DpCo
  Max Normal Load          : 19.0029
  Max Normal Stress        : -221204.
  Displacement             : 0.000115007
  Contact a-length         : 0.0184986
  Contact b-length         : 0.00224943
  Contact area             : 0.000130725
  Distance to Corner       : 0.0062621
  Effective Speed Factor   : 2.659
  Load-Life Factor         : 11.1941
                                       7
  Expected Average Life    : 5.96675 10
****
 Contact name              : DiCi
  Max Normal Load          : 14.8058
  Max Normal Stress        : -200853.
  Displacement             : 0.0000948147
  Contact a-length         : 0.0167964
  Contact b-length         : 0.00204237
  Contact area             : 0.00010777
  Distance to Corner: Dp   : 0.00945363
  Distance to Corner: Ds   : 0.00945363
  Effective Speed Factor   : 2.659
  Load-Life Factor         : 14.3674
                                       8
  Expected Average Life    : 1.61917 10
****
 Contact name              : DsCi
  Max Normal Load          : 23.4825
  Max Normal Stress        : -236362.
  Displacement             : 0.000131288
  Contact a-length         : 0.0197647
  Contact b-length         : 0.00240312
  Contact area             : 0.000149216
  Distance to Corner       : 0.00499597
  Effective Speed Factor   : 2.659
  Load-Life Factor         : 9.05866
                                       7
  Expected Average Life    : 2.55882 10
```

```
==========================
 Ball number          : 15
 Ball angle           : 210.
 Ball position        : {-1.32938, -1.89856, 0.}
 Solution current?    : Yes
 Ball activity        : ON
 Ball request         : solve
 Cross over angle          : 38.6358
 Residual Force Vector     : {-0.441789, 0.0261266, -0.155009}
                                                  -6
 Displacement Residual     : 1.8934 10
****
 Contact name              : DpCo
  Max Normal Load          : 18.9341
  Max Normal Stress        : -220930.
  Displacement             : 0.000114722
  Contact a-length         : 0.0184757
  Contact b-length         : 0.00224664
  Contact area             : 0.000130402
  Distance to Corner       : 0.00628502
  Effective Speed Factor   : 2.659
  Load-Life Factor         : 11.2348
                                        7
  Expected Average Life    : 6.054 10
****
 Contact name              : DiCi
  Max Normal Load          : 14.7922
  Max Normal Stress        : -200830.
  Displacement             : 0.0000947929
  Contact a-length         : 0.0167944
  Contact b-length         : 0.00204213
  Contact area             : 0.000107746
  Distance to Corner: Dp   : 0.00945556
  Distance to Corner: Ds   : 0.00945556
  Effective Speed Factor   : 2.659
  Load-Life Factor         : 14.3806
                                          8
  Expected Average Life    : 1.62513 10
****
 Contact name              : DsCi
  Max Normal Load          : 23.4272
  Max Normal Stress        : -236165.
  Displacement             : 0.00013107
  Contact a-length         : 0.0197483
  Contact b-length         : 0.00240113
  Contact area             : 0.000148969
  Distance to Corner       : 0.0050124
  Effective Speed Factor   : 2.659
  Load-Life Factor         : 9.08006
                                        7
  Expected Average Life    : 2.58308 10
```

```
=========================
 Ball number          : 16
 Ball angle           : 200.
 Ball position        : {-0.97437, -2.08954, 0.}
 Solution current?    : Yes
 Ball activity        : ON
 Ball request         : solve
 Cross over angle          : 38.7388
 Residual Force Vector     : {-0.429466, -0.0540916, -0.155388}
                                                  -6
 Displacement Residual     : 1.85782 10
****
 Contact name              : DpCo
  Max Normal Load          : 18.865
  Max Normal Stress        : -220654.
  Displacement             : 0.000114436
  Contact a-length         : 0.0184526
  Contact b-length         : 0.00224383
  Contact area             : 0.000130076
  Distance to Corner       : 0.00630807
  Effective Speed Factor   : 2.659
  Load-Life Factor         : 11.2759
                                      7
  Expected Average Life    : 6.1431 10
****
 Contact name              : DiCi
  Max Normal Load          : 14.7784
  Max Normal Stress        : -200806.
  Displacement             : 0.0000947701
  Contact a-length         : 0.0167924
  Contact b-length         : 0.00204189
  Contact area             : 0.00010772
  Distance to Corner: Dp   : 0.00945758
  Distance to Corner: Ds   : 0.00945758
  Effective Speed Factor   : 2.659
  Load-Life Factor         : 14.394
                                      8
  Expected Average Life    : 1.63121 10
****
 Contact name              : DsCi
  Max Normal Load          : 23.3716
  Max Normal Stress        : -235968.
  Displacement             : 0.00013085
  Contact a-length         : 0.0197318
  Contact b-length         : 0.00239912
  Contact area             : 0.000148719
  Distance to Corner       : 0.00502892
  Effective Speed Factor   : 2.659
  Load-Life Factor         : 9.10166
                                      7
  Expected Average Life    : 2.60775 10
```

```
=========================
 Ball number          : 17
 Ball angle           : 190.
 Ball position        : {-0.593576, -2.21526, 0.}
 Solution current?    : Yes
 Ball activity        : ON
 Ball request         : solve
 Cross over angle          : 38.8422
 Residual Force Vector     : {-0.403037, -0.129072, -0.155712}
                                          -6
 Displacement Residual     : 1.82228 10
****
 Contact name              : DpCo
  Max Normal Load          : 18.7958
  Max Normal Stress        : -220377.
  Displacement             : 0.000114148
  Contact a-length         : 0.0184294
  Contact b-length         : 0.00224101
  Contact area             : 0.00012975
  Distance to Corner       : 0.00633126
  Effective Speed Factor   : 2.659
  Load-Life Factor         : 11.3174
                                        7
  Expected Average Life    : 6.23409 10
****
 Contact name              : DiCi
  Max Normal Load          : 14.7644
  Max Normal Stress        : -200781.
  Displacement             : 0.0000947462
  Contact a-length         : 0.0167903
  Contact b-length         : 0.00204163
  Contact area             : 0.000107693
  Distance to Corner: Dp   : 0.0094597
  Distance to Corner: Ds   : 0.0094597
  Effective Speed Factor   : 2.659
  Load-Life Factor         : 14.4077
                                        8
  Expected Average Life    : 1.63741 10
****
 Contact name              : DsCi
  Max Normal Load          : 23.3156
  Max Normal Stress        : -235769.
  Displacement             : 0.00013063
  Contact a-length         : 0.0197151
  Contact b-length         : 0.0023971
  Contact area             : 0.000148469
  Distance to Corner       : 0.00504553
  Effective Speed Factor   : 2.659
  Load-Life Factor         : 9.12349
                                        7
  Expected Average Life    : 2.63286 10
```

```
=========================
 Ball number          : 18
 Ball angle           : 180.
 Ball position        : {-0.198824, -2.27257, 0.}
 Solution current?    : Yes
 Ball activity        : ON
 Ball request         : solve
 Cross over angle          : 31.7656
 Residual Force Vector     : {-0.0739164, -0.00322451, 0.010387}
                                                  -7
 Displacement Residual     : 2.78822 10
****
 Contact name              : DpCi
  Max Normal Load          : 20.5737
  Max Normal Stress        : -226110.
  Displacement             : 0.000120154
  Contact a-length         : 0.0189081
  Contact b-length         : 0.00229907
  Contact area             : 0.000136568
  Distance to Corner       : 0.00585262
  Effective Speed Factor   : 2.659
  Load-Life Factor         : 10.3394
                                       7
  Expected Average Life    : 4.34281 10
****
 Contact name              : DiCi
  Max Normal Load          : 13.0052
  Max Normal Stress        : -193714.
  Displacement             : 0.0000881938
  Contact a-length         : 0.0161993
  Contact b-length         : 0.00196977
  Contact area             : 0.000100245
  Distance to Corner: Dp   : 0.0100507
  Distance to Corner: Ds   : 0.0100507
  Effective Speed Factor   : 2.659
  Load-Life Factor         : 16.3566
                                       8
  Expected Average Life    : 2.71989 10
****
 Contact name              : DsCo
  Max Normal Load          : 25.2102
  Max Normal Stress        : -241976.
  Displacement             : 0.000137629
  Contact a-length         : 0.0202363
  Contact b-length         : 0.00246084
  Contact area             : 0.000156446
  Distance to Corner       : 0.00452437
  Effective Speed Factor   : 2.659
  Load-Life Factor         : 8.43785
                                       7
  Expected Average Life    : 1.92624 10
```

```
=========================
 Ball number          : 19
 Ball angle           : 170.
 Ball position        : {0.199883, -2.28468, 0.}
 Solution current?    : Yes
 Ball activity        : ON
 Ball request         : solve
 Cross over angle          : 31.66
 Residual Force Vector     : {-0.0727338, -0.0159131, 0.0102101}
                                                  -7
 Displacement Residual     : 2.81512 10
****
 Contact name              : DpCi
  Max Normal Load          : 20.652
  Max Normal Stress        : -226398.
  Displacement             : 0.00012046
  Contact a-length         : 0.0189321
  Contact b-length         : 0.00230199
  Contact area             : 0.000136915
  Distance to Corner       : 0.00582859
  Effective Speed Factor   : 2.659
  Load-Life Factor         : 10.3002
                                      7
  Expected Average Life    : 4.27731 10
****
 Contact name              : DiCi
  Max Normal Load          : 13.0017
  Max Normal Stress        : -193694.
  Displacement             : 0.0000881756
  Contact a-length         : 0.0161976
  Contact b-length         : 0.00196957
  Contact area             : 0.000100224
  Distance to Corner: Dp   : 0.0100524
  Distance to Corner: Ds   : 0.0100524
  Effective Speed Factor   : 2.659
  Load-Life Factor         : 16.3609
                                      8
  Expected Average Life    : 2.7228 10
****
 Contact name              : DsCo
  Max Normal Load          : 25.2747
  Max Normal Stress        : -242182.
  Displacement             : 0.000137863
  Contact a-length         : 0.0202535
  Contact b-length         : 0.00246293
  Contact area             : 0.000156712
  Distance to Corner       : 0.00450714
  Effective Speed Factor   : 2.659
  Load-Life Factor         : 8.41631
                                      7
  Expected Average Life    : 1.90665 10
```

```
=========================
 Ball number          : 20
 Ball angle           : 160.
 Ball position        : {0.596722, -2.227, 0.}
 Solution current?    : Yes
 Ball activity        : ON
 Ball request         : solve
 Cross over angle          : 31.5549
 Residual Force Vector     : {-0.0693725, -0.0282938, 0.0100355}
                                          -7
 Displacement Residual     : 2.8419 10
****
 Contact name              : DpCi
  Max Normal Load          : 20.73
  Max Normal Stress        : -226683.
  Displacement             : 0.000120764
  Contact a-length         : 0.018956
  Contact b-length         : 0.00230489
  Contact area             : 0.000137261
  Distance to Corner       : 0.0058047
  Effective Speed Factor   : 2.659
  Load-Life Factor         : 10.2614
                                        7
  Expected Average Life    : 4.21326 10
****
 Contact name              : DiCi
  Max Normal Load          : 12.998
  Max Normal Stress        : -193673.
  Displacement             : 0.0000881562
  Contact a-length         : 0.0161959
  Contact b-length         : 0.00196935
  Contact area             : 0.000100202
  Distance to Corner: Dp   : 0.0100541
  Distance to Corner: Ds   : 0.0100541
  Effective Speed Factor   : 2.659
  Load-Life Factor         : 16.3656
                                        8
  Expected Average Life    : 2.72593 10
****
 Contact name              : DsCo
  Max Normal Load          : 25.3389
  Max Normal Stress        : -242387.
  Displacement             : 0.000138096
  Contact a-length         : 0.0202707
  Contact b-length         : 0.00246502
  Contact area             : 0.000156978
  Distance to Corner       : 0.00449002
  Effective Speed Factor   : 2.659
  Load-Life Factor         : 8.39499
                                        7
  Expected Average Life    : 1.8874 10
```

```
=========================
 Ball number          : 21
 Ball angle           : 150.
 Ball position        : {0.979506, -2.10056, 0.}
 Solution current?    : Yes
 Ball activity        : ON
 Ball request         : solve
 Cross over angle          : 31.4502
 Residual Force Vector     : {-0.063903, -0.0399921, 0.0098633}
                                                  -7
 Displacement Residual     : 2.86857 10
****
 Contact name              : DpCi
  Max Normal Load          : 20.8078
  Max Normal Stress        : -226967.
  Displacement             : 0.000121067
  Contact a-length         : 0.0189797
  Contact b-length         : 0.00230778
  Contact area             : 0.000137605
  Distance to Corner       : 0.00578095
  Effective Speed Factor   : 2.659
  Load-Life Factor         : 10.2231
                                        7
  Expected Average Life    : 4.15062 10
****
 Contact name              : DiCi
  Max Normal Load          : 12.994
  Max Normal Stress        : -193650.
  Displacement             : 0.0000881358
  Contact a-length         : 0.016194
  Contact b-length         : 0.00196912
  Contact area             : 0.000100179
  Distance to Corner: Dp   : 0.010056
  Distance to Corner: Ds   : 0.010056
  Effective Speed Factor   : 2.659
  Load-Life Factor         : 16.3706
                                        8
  Expected Average Life    : 2.72926 10
****
 Contact name              : DsCo
  Max Normal Load          : 25.4028
  Max Normal Stress        : -242590.
  Displacement             : 0.000138328
  Contact a-length         : 0.0202877
  Contact b-length         : 0.00246708
  Contact area             : 0.000157241
  Distance to Corner       : 0.00447301
  Effective Speed Factor   : 2.659
  Load-Life Factor         : 8.37387
                                        7
  Expected Average Life    : 1.86848 10
```

```
=========================
 Ball number          : 22
 Ball angle           : 140.
 Ball position        : {1.33635, -1.90851, 0.}
 Solution current?    : Yes
 Ball activity        : ON
 Ball request         : solve
 Cross over angle         : 31.346
 Residual Force Vector    : {-0.0564603, -0.0506487, 0.00969339}
                                          -7
 Displacement Residual    : 2.8951 10
****
 Contact name             : DpCi
  Max Normal Load         : 20.8853
  Max Normal Stress       : -227250.
  Displacement            : 0.000121368
  Contact a-length        : 0.0190033
  Contact b-length        : 0.00231065
  Contact area            : 0.000137948
  Distance to Corner      : 0.00575735
  Effective Speed Factor  : 2.659
  Load-Life Factor        : 10.1852
                                       7
  Expected Average Life   : 4.08936 10
****
 Contact name             : DiCi
  Max Normal Load         : 12.9898
  Max Normal Stress       : -193626.
  Displacement            : 0.0000881143
  Contact a-length        : 0.016192
  Contact b-length        : 0.00196888
  Contact area            : 0.000100154
  Distance to Corner: Dp  : 0.010058
  Distance to Corner: Ds  : 0.010058
  Effective Speed Factor  : 2.659
  Load-Life Factor        : 16.3759
                                       8
  Expected Average Life   : 2.7328 10
****
 Contact name             : DsCo
  Max Normal Load         : 25.4665
  Max Normal Stress       : -242793.
  Displacement            : 0.000138559
  Contact a-length        : 0.0203046
  Contact b-length        : 0.00246914
  Contact area            : 0.000157503
  Distance to Corner      : 0.0044561
  Effective Speed Factor  : 2.659
  Load-Life Factor        : 8.35295
                                       7
  Expected Average Life   : 1.84988 10
```

```
=========================
 Ball number          : 23
 Ball angle           : 130.
 Ball position        : {1.65605, -1.65605, 0.}
 Solution current?    : Yes
 Ball activity        : ON
 Ball request         : solve
 Cross over angle          : 31.2421
 Residual Force Vector     : {-0.0472407, -0.0599305, 0.00952573}
                                          -7
 Displacement Residual     : 2.92152 10
****
 Contact name              : DpCi
  Max Normal Load          : 20.9625
  Max Normal Stress        : -227530.
  Displacement             : 0.000121668
  Contact a-length         : 0.0190268
  Contact b-length         : 0.0023135
  Contact area             : 0.000138288
  Distance to Corner       : 0.00573389
  Effective Speed Factor   : 2.659
  Load-Life Factor         : 10.1476
                                        7
  Expected Average Life    : 4.02944 10
****
 Contact name              : DiCi
  Max Normal Load          : 12.9853
  Max Normal Stress        : -193602.
  Displacement             : 0.0000880917
  Contact a-length         : 0.0161899
  Contact b-length         : 0.00196863
  Contact area             : 0.000100129
  Distance to Corner: Dp   : 0.0100601
  Distance to Corner: Ds   : 0.0100601
  Effective Speed Factor   : 2.659
  Load-Life Factor         : 16.3816
                                        8
  Expected Average Life    : 2.73656 10
****
 Contact name              : DsCo
  Max Normal Load          : 25.5298
  Max Normal Stress        : -242993.
  Displacement             : 0.000138788
  Contact a-length         : 0.0203214
  Contact b-length         : 0.00247118
  Contact area             : 0.000157764
  Distance to Corner       : 0.00443931
  Effective Speed Factor   : 2.659
  Load-Life Factor         : 8.33224
                                        7
  Expected Average Life    : 1.8316 10
```

```
=========================
 Ball number          : 24
 Ball angle           : 120.
 Ball position        : {1.92842, -1.35029, 0.}
 Solution current?    : Yes
 Ball activity        : ON
 Ball request         : solve
 Cross over angle         : 31.1387
 Residual Force Vector    : {-0.0364967, -0.0675411, 0.00936028}
                                                  -7
 Displacement Residual    : 2.94781 10
****
 Contact name             : DpCi
  Max Normal Load         : 21.0394
  Max Normal Stress       : -227809.
  Displacement            : 0.000121966
  Contact a-length        : 0.0190501
  Contact b-length        : 0.00231634
  Contact area            : 0.000138627
  Distance to Corner      : 0.00571057
  Effective Speed Factor  : 2.659
  Load-Life Factor        : 10.1105
                                     7
  Expected Average Life   : 3.97082 10
****
 Contact name             : DiCi
  Max Normal Load         : 12.9806
  Max Normal Stress       : -193576.
  Displacement            : 0.000088068
  Contact a-length        : 0.0161878
  Contact b-length        : 0.00196836
  Contact area            : 0.000100102
  Distance to Corner: Dp  : 0.0100622
  Distance to Corner: Ds  : 0.0100622
  Effective Speed Factor  : 2.659
  Load-Life Factor        : 16.3875
                                     8
  Expected Average Life   : 2.74051 10
****
 Contact name             : DsCo
  Max Normal Load         : 25.5928
  Max Normal Stress       : -243193.
  Displacement            : 0.000139016
  Contact a-length        : 0.0203381
  Contact b-length        : 0.00247321
  Contact area            : 0.000158023
  Distance to Corner      : 0.00442262
  Effective Speed Factor  : 2.659
  Load-Life Factor        : 8.31172
                                     7
  Expected Average Life   : 1.81362 10
```

```
=========================
 Ball number          : 25
 Ball angle           : 110.
 Ball position        : {2.14461, -1.00005, 0.}
 Solution current?    : Yes
 Ball activity        : ON
 Ball request         : solve
 Cross over angle          : 31.0357
 Residual Force Vector     : {-0.0245303, -0.0732304, 0.00919699}
                                                  -7
 Displacement Residual     : 2.97397 10
****
 Contact name              : DpCi
  Max Normal Load          : 21.1161
  Max Normal Stress        : -228086.
  Displacement             : 0.000122263
  Contact a-length         : 0.0190733
  Contact b-length         : 0.00231916
  Contact area             : 0.000138965
  Distance to Corner       : 0.00568739
  Effective Speed Factor   : 2.659
  Load-Life Factor         : 10.0738
                                        7
  Expected Average Life    : 3.91346 10
****
 Contact name              : DiCi
  Max Normal Load          : 12.9757
  Max Normal Stress        : -193548.
  Displacement             : 0.0000880433
  Contact a-length         : 0.0161855
  Contact b-length         : 0.00196809
  Contact area             : 0.000100074
  Distance to Corner: Dp   : 0.0100645
  Distance to Corner: Ds   : 0.0100645
  Effective Speed Factor   : 2.659
  Load-Life Factor         : 16.3937
                                        8
  Expected Average Life    : 2.74467 10
****
 Contact name              : DsCo
  Max Normal Load          : 25.6555
  Max Normal Stress        : -243391.
  Displacement             : 0.000139243
  Contact a-length         : 0.0203546
  Contact b-length         : 0.00247523
  Contact area             : 0.000158281
  Distance to Corner       : 0.00440603
  Effective Speed Factor   : 2.659
  Load-Life Factor         : 8.2914
                                        7
  Expected Average Life    : 1.79596 10
```

```
==========================
 Ball number          : 26
 Ball angle           : 100.
 Ball position        : {2.29743, -0.615594, 0.}
 Solution current?    : Yes
 Ball activity        : ON
 Ball request         : solve
 Cross over angle          : 30.9332
 Residual Force Vector     : {-0.0116846, -0.0768026, 0.00903583}
                                                  -7
 Displacement Residual     : 2.99999 10
****
 Contact name              : DpCi
  Max Normal Load          : 21.1925
  Max Normal Stress        : -228362.
  Displacement             : 0.000122559
  Contact a-length         : 0.0190963
  Contact b-length         : 0.00232196
  Contact area             : 0.000139301
  Distance to Corner       : 0.00566436
  Effective Speed Factor   : 2.659
  Load-Life Factor         : 10.0375
                                        7
  Expected Average Life    : 3.85735 10
****
 Contact name              : DiCi
  Max Normal Load          : 12.9706
  Max Normal Stress        : -193520.
  Displacement             : 0.0000880175
  Contact a-length         : 0.0161831
  Contact b-length         : 0.0019678
  Contact area             : 0.000100044
  Distance to Corner: Dp   : 0.0100669
  Distance to Corner: Ds   : 0.0100669
  Effective Speed Factor   : 2.659
  Load-Life Factor         : 16.4002
                                        8
  Expected Average Life    : 2.74904 10
****
 Contact name              : DsCo
  Max Normal Load          : 25.7179
  Max Normal Stress        : -243588.
  Displacement             : 0.000139469
  Contact a-length         : 0.0203711
  Contact b-length         : 0.00247723
  Contact area             : 0.000158537
  Distance to Corner       : 0.00438956
  Effective Speed Factor   : 2.659
  Load-Life Factor         : 8.27128
                                        7
  Expected Average Life    : 1.77858 10
```

```
=========================
 Ball number          : 27
 Ball angle           : 90.
 Ball position        : {2.38153, -0.208357, 0.}
 Solution current?    : Yes
 Ball activity        : ON
 Ball request         : solve
 Cross over angle          : 30.8311
 Residual Force Vector     : {0.00166613, -0.0781234, 0.00887676}
                                                  -7
 Displacement Residual     : 3.02589 10
****
 Contact name              : DpCi
  Max Normal Load          : 21.2686
  Max Normal Stress        : -228636.
  Displacement             : 0.000122853
  Contact a-length         : 0.0191192
  Contact b-length         : 0.00232474
  Contact area             : 0.000139635
  Distance to Corner       : 0.00564146
  Effective Speed Factor   : 2.659
  Load-Life Factor         : 10.0016
                                       7
  Expected Average Life    : 3.80243 10
****
 Contact name              : DiCi
  Max Normal Load          : 12.9652
  Max Normal Stress        : -193491.
  Displacement             : 0.0000879907
  Contact a-length         : 0.0161806
  Contact b-length         : 0.0019675
  Contact area             : 0.000100014
  Distance to Corner: Dp   : 0.0100694
  Distance to Corner: Ds   : 0.0100694
  Effective Speed Factor   : 2.659
  Load-Life Factor         : 16.407
                                       8
  Expected Average Life    : 2.75361 10
****
 Contact name              : DsCo
  Max Normal Load          : 25.78
  Max Normal Stress        : -243784.
  Displacement             : 0.000139693
  Contact a-length         : 0.0203875
  Contact b-length         : 0.00247922
  Contact area             : 0.000158792
  Distance to Corner       : 0.00437318
  Effective Speed Factor   : 2.659
  Load-Life Factor         : 8.25135
                                       7
  Expected Average Life    : 1.7615 10
```

```
=========================
 Ball number          : 28
 Ball angle           : 80.
 Ball position        : {2.39363, 0.209416, 0.}
 Solution current?    : Yes
 Ball activity        : ON
 Ball request         : solve
 Cross over angle          : 30.7294
 Residual Force Vector     : {0.0151273, -0.0771244, 0.00871974}
                                                  -7
 Displacement Residual     : 3.05165 10
****
 Contact name              : DpCi
  Max Normal Load          : 21.3444
  Max Normal Stress        : -228908.
  Displacement             : 0.000123145
  Contact a-length         : 0.019142
  Contact b-length         : 0.00232751
  Contact area             : 0.000139968
  Distance to Corner       : 0.00561871
  Effective Speed Factor   : 2.659
  Load-Life Factor         : 9.96607
                                       7
  Expected Average Life    : 3.74869 10
****
 Contact name              : DiCi
  Max Normal Load          : 12.9596
  Max Normal Stress        : -193460.
  Displacement             : 0.0000879629
  Contact a-length         : 0.0161781
  Contact b-length         : 0.00196719
  Contact area             : 0.0000999823
  Distance to Corner: Dp   : 0.0100719
  Distance to Corner: Ds   : 0.0100719
  Effective Speed Factor   : 2.659
  Load-Life Factor         : 16.4141
                                       8
  Expected Average Life    : 2.75838 10
****
 Contact name              : DsCo
  Max Normal Load          : 25.8418
  Max Normal Stress        : -243979.
  Displacement             : 0.000139916
  Contact a-length         : 0.0204038
  Contact b-length         : 0.0024812
  Contact area             : 0.000159046
  Distance to Corner       : 0.00435692
  Effective Speed Factor   : 2.659
  Load-Life Factor         : 8.23161
                                       7
  Expected Average Life    : 1.74471 10
```

```
==========================
 Ball number          : 29
 Ball angle           : 70.
 Ball position        : {2.33264, 0.62503, 0.}
 Solution current?    : Yes
 Ball activity        : ON
 Ball request         : solve
 Cross over angle          : 30.6281
 Residual Force Vector     : {0.0282959, -0.0738064, 0.00856473}
                                                  -7
 Displacement Residual     : 3.07727 10
****
 Contact name              : DpCi
  Max Normal Load          : 21.42
  Max Normal Stress        : -229178.
  Displacement             : 0.000123436
  Contact a-length         : 0.0191646
  Contact b-length         : 0.00233026
  Contact area             : 0.000140298
  Distance to Corner       : 0.00559609
  Effective Speed Factor   : 2.659
  Load-Life Factor         : 9.93092
                                       7
  Expected Average Life    : 3.69608 10
****
 Contact name              : DiCi
  Max Normal Load          : 12.9537
  Max Normal Stress        : -193428.
  Displacement             : 0.000087934
  Contact a-length         : 0.0161754
  Contact b-length         : 0.00196687
  Contact area             : 0.0000999496
  Distance to Corner: Dp   : 0.0100746
  Distance to Corner: Ds   : 0.0100746
  Effective Speed Factor   : 2.659
  Load-Life Factor         : 16.4215
                                       8
  Expected Average Life    : 2.76335 10
****
 Contact name              : DsCo
  Max Normal Load          : 25.9034
  Max Normal Stress        : -244172.
  Displacement             : 0.000140138
  Contact a-length         : 0.0204199
  Contact b-length         : 0.00248317
  Contact area             : 0.000159298
  Distance to Corner       : 0.00434075
  Effective Speed Factor   : 2.659
  Load-Life Factor         : 8.21206
                                       7
  Expected Average Life    : 1.72819 10
```

```
==========================
 Ball number          : 30
 Ball angle           : 60.
 Ball position        : {2.19968, 1.02573, 0.}
 Solution current?    : Yes
 Ball activity        : ON
 Ball request         : solve
 Cross over angle          : 30.5272
 Residual Force Vector     : {0.0407723, -0.0682405, 0.00841171}
                                          -7
 Displacement Residual     : 3.10275 10
****
 Contact name              : DpCi
  Max Normal Load          : 21.4952
  Max Normal Stress        : -229447.
  Displacement             : 0.000123726
  Contact a-length         : 0.0191871
  Contact b-length         : 0.00233299
  Contact area             : 0.000140628
  Distance to Corner       : 0.00557361
  Effective Speed Factor   : 2.659
  Load-Life Factor         : 9.89615
                                        7
  Expected Average Life    : 3.64459 10
****
 Contact name              : DiCi
  Max Normal Load          : 12.9477
  Max Normal Stress        : -193396.
  Displacement             : 0.0000879042
  Contact a-length         : 0.0161727
  Contact b-length         : 0.00196653
  Contact area             : 0.0000999157
  Distance to Corner: Dp   : 0.0100773
  Distance to Corner: Ds   : 0.0100773
  Effective Speed Factor   : 2.659
  Load-Life Factor         : 16.4292
                                        8
  Expected Average Life    : 2.76852 10
****
 Contact name              : DsCo
  Max Normal Load          : 25.9646
  Max Normal Stress        : -244364.
  Displacement             : 0.000140358
  Contact a-length         : 0.020436
  Contact b-length         : 0.00248512
  Contact area             : 0.000159549
  Distance to Corner       : 0.00432469
  Effective Speed Factor   : 2.659
  Load-Life Factor         : 8.19269
                                        7
  Expected Average Life    : 1.71195 10
```

```
=========================
 Ball number          : 31
 Ball angle           : 50.
 Ball position        : {1.99811, 1.39909, 0.}
 Solution current?    : Yes
 Ball activity        : ON
 Ball request         : solve
 Cross over angle          : 30.4268
 Residual Force Vector     : {0.0521727, -0.0605664, 0.00826064}
                                                  -7
 Displacement Residual     : 3.12809 10
****
 Contact name              : DpCi
  Max Normal Load          : 21.5702
  Max Normal Stress        : -229714.
  Displacement             : 0.000124014
  Contact a-length         : 0.0192094
  Contact b-length         : 0.0023357
  Contact area             : 0.000140955
  Distance to Corner       : 0.00555127
  Effective Speed Factor   : 2.659
  Load-Life Factor         : 9.86175
                                       7
  Expected Average Life    : 3.59418 10
****
 Contact name              : DiCi
  Max Normal Load          : 12.9414
  Max Normal Stress        : -193362.
  Displacement             : 0.0000878734
  Contact a-length         : 0.0161699
  Contact b-length         : 0.00196619
  Contact area             : 0.0000998806
  Distance to Corner: Dp   : 0.0100801
  Distance to Corner: Ds   : 0.0100801
  Effective Speed Factor   : 2.659
  Load-Life Factor         : 16.4371
                                       8
  Expected Average Life    : 2.77389 10
****
 Contact name              : DsCo
  Max Normal Load          : 26.0255
  Max Normal Stress        : -244555.
  Displacement             : 0.000140577
  Contact a-length         : 0.0204519
  Contact b-length         : 0.00248706
  Contact area             : 0.000159798
  Distance to Corner       : 0.00430873
  Effective Speed Factor   : 2.659
  Load-Life Factor         : 8.17351
                                       7
  Expected Average Life    : 1.69597 10
```

```
==========================
 Ball number          : 32
 Ball angle           : 40.
 Ball position        : {1.73339, 1.73339, 0.}
 Solution current?    : Yes
 Ball activity        : ON
 Ball request         : solve
 Cross over angle          : 30.3268
 Residual Force Vector     : {0.0621409, -0.0509896, 0.00811149}
                                                  -7
 Displacement Residual     : 3.15328 10
****
 Contact name              : DpCi
  Max Normal Load          : 21.6449
  Max Normal Stress        : -229980.
  Displacement             : 0.000124301
  Contact a-length         : 0.0192316
  Contact b-length         : 0.0023384
  Contact area             : 0.000141281
  Distance to Corner       : 0.00552907
  Effective Speed Factor   : 2.659
  Load-Life Factor         : 9.82772
                                       7
  Expected Average Life    : 3.54482 10
****
 Contact name              : DiCi
  Max Normal Load          : 12.9349
  Max Normal Stress        : -193327.
  Displacement             : 0.0000878416
  Contact a-length         : 0.0161669
  Contact b-length         : 0.00196583
  Contact area             : 0.0000998445
  Distance to Corner: Dp   : 0.0100831
  Distance to Corner: Ds   : 0.0100831
  Effective Speed Factor   : 2.659
  Load-Life Factor         : 16.4454
                                       8
  Expected Average Life    : 2.77946 10
****
 Contact name              : DsCo
  Max Normal Load          : 26.0862
  Max Normal Stress        : -244744.
  Displacement             : 0.000140796
  Contact a-length         : 0.0204678
  Contact b-length         : 0.00248899
  Contact area             : 0.000160046
  Distance to Corner       : 0.00429288
  Effective Speed Factor   : 2.659
  Load-Life Factor         : 8.15451
                                       7
  Expected Average Life    : 1.68026 10
```

```
=========================
 Ball number          : 33
 Ball angle           : 30.
 Ball position        : {1.41303, 2.01802, 0.}
 Solution current?    : Yes
 Ball activity        : ON
 Ball request         : solve
 Cross over angle          : 30.2272
 Residual Force Vector     : {0.0703598, -0.0397757, 0.00796423}
                                                  -7
 Displacement Residual     : 3.17833 10
****
 Contact name              : DpCi
  Max Normal Load          : 21.7193
  Max Normal Stress        : -230244.
  Displacement             : 0.000124587
  Contact a-length         : 0.0192537
  Contact b-length         : 0.00234109
  Contact area             : 0.000141606
  Distance to Corner       : 0.005507
  Effective Speed Factor   : 2.659
  Load-Life Factor         : 9.79405
                                        7
  Expected Average Life    : 3.49649 10
****
 Contact name              : DiCi
  Max Normal Load          : 12.9282
  Max Normal Stress        : -193291.
  Displacement             : 0.0000878089
  Contact a-length         : 0.0161639
  Contact b-length         : 0.00196547
  Contact area             : 0.0000998073
  Distance to Corner: Dp   : 0.0100861
  Distance to Corner: Ds   : 0.0100861
  Effective Speed Factor   : 2.659
  Load-Life Factor         : 16.4539
                                        8
  Expected Average Life    : 2.78522 10
****
 Contact name              : DsCo
  Max Normal Load          : 26.1465
  Max Normal Stress        : -244933.
  Displacement             : 0.000141012
  Contact a-length         : 0.0204836
  Contact b-length         : 0.00249091
  Contact area             : 0.000160292
  Distance to Corner       : 0.00427712
  Effective Speed Factor   : 2.659
  Load-Life Factor         : 8.13569
                                        7
  Expected Average Life    : 1.6648 10
```

```
=========================
 Ball number          : 34
 Ball angle           : 20.
 Ball position        : {1.04627, 2.24374, 0.}
 Solution current?    : Yes
 Ball activity        : ON
 Ball request         : solve
 Cross over angle          : 30.128
 Residual Force Vector     : {0.0765608, -0.027243, 0.00781883}
                                                  -7
 Displacement Residual     : 3.20323 10
****
 Contact name              : DpCi
  Max Normal Load          : 21.7934
  Max Normal Stress        : -230506.
  Displacement             : 0.000124871
  Contact a-length         : 0.0192756
  Contact b-length         : 0.00234375
  Contact area             : 0.000141929
  Distance to Corner       : 0.00548507
  Effective Speed Factor   : 2.659
  Load-Life Factor         : 9.76074
                                        7
  Expected Average Life    : 3.44916 10
****
 Contact name              : DiCi
  Max Normal Load          : 12.9213
  Max Normal Stress        : -193254.
  Displacement             : 0.0000877752
  Contact a-length         : 0.0161608
  Contact b-length         : 0.00196509
  Contact area             : 0.000099769
  Distance to Corner: Dp   : 0.0100892
  Distance to Corner: Ds   : 0.0100892
  Effective Speed Factor   : 2.659
  Load-Life Factor         : 16.4627
                                        8
  Expected Average Life    : 2.79118 10
****
 Contact name              : DsCo
  Max Normal Load          : 26.2066
  Max Normal Stress        : -245120.
  Displacement             : 0.000141228
  Contact a-length         : 0.0204992
  Contact b-length         : 0.00249281
  Contact area             : 0.000160537
  Distance to Corner       : 0.00426147
  Effective Speed Factor   : 2.659
  Load-Life Factor         : 8.11705
                                        7
  Expected Average Life    : 1.64959 10
```

```
==========================
 Ball number          : 35
 Ball angle           : 10.
 Ball position        : {0.643902, 2.40308, 0.}
 Solution current?    : Yes
 Ball activity        : ON
 Ball request         : solve
 Cross over angle          : 30.0293
 Residual Force Vector     : {0.0805337, -0.0137539, 0.00767527}
                                                  -7
 Displacement Residual     : 3.22798 10
****
 Contact name              : DpCi
  Max Normal Load          : 21.8673
  Max Normal Stress        : -230767.
  Displacement             : 0.000125153
  Contact a-length         : 0.0192974
  Contact b-length         : 0.0023464
  Contact area             : 0.00014225
  Distance to Corner       : 0.00546327
  Effective Speed Factor   : 2.659
  Load-Life Factor         : 9.72778
                                        7
  Expected Average Life    : 3.40281 10
****
 Contact name              : DiCi
  Max Normal Load          : 12.9142
  Max Normal Stress        : -193215.
  Displacement             : 0.0000877406
  Contact a-length         : 0.0161576
  Contact b-length         : 0.0019647
  Contact area             : 0.0000997297
  Distance to Corner: Dp   : 0.0100924
  Distance to Corner: Ds   : 0.0100924
  Effective Speed Factor   : 2.659
  Load-Life Factor         : 16.4718
                                        8
  Expected Average Life    : 2.79734 10
****
 Contact name              : DsCo
  Max Normal Load          : 26.2663
  Max Normal Stress        : -245306.
  Displacement             : 0.000141442
  Contact a-length         : 0.0205148
  Contact b-length         : 0.0024947
  Contact area             : 0.000160781
  Distance to Corner       : 0.00424591
  Effective Speed Factor   : 2.659
  Load-Life Factor         : 8.09858
                                        7
  Expected Average Life    : 1.63463 10
```

```
==========================
 Ball number          : 36
 Ball angle           : 0.
 Ball position        : {0.217889, 2.49049, 0.}
 Solution current?    : Yes
 Ball activity        : ON
 Ball request         : solve
 Cross over angle          : 37.1407
 Residual Force Vector     : {0.557705, 0.199261, -0.143309}
                                                  -6
 Displacement Residual     : 2.43194 10
****
 Contact name              : DpCo
  Max Normal Load          : 19.9461
  Max Normal Stress        : -224878.
  Displacement             : 0.000118859
  Contact a-length         : 0.0188058
  Contact b-length         : 0.00228679
  Contact area             : 0.000135104
  Distance to Corner       : 0.00595484
  Effective Speed Factor   : 2.659
  Load-Life Factor         : 10.6647
                                        7
  Expected Average Life    : 4.91565 10
****
 Contact name              : DiCi
  Max Normal Load          : 14.974
  Max Normal Stress        : -201066.
  Displacement             : 0.0000950156
  Contact a-length         : 0.0168142
  Contact b-length         : 0.00204453
  Contact area             : 0.000107999
  Distance to Corner: Dp   : 0.00943585
  Distance to Corner: Ds   : 0.00943585
  Effective Speed Factor   : 2.659
  Load-Life Factor         : 14.206
                                        8
  Expected Average Life    : 1.54762 10
****
 Contact name              : DsCi
  Max Normal Load          : 24.2275
  Max Normal Stress        : -238991.
  Displacement             : 0.000134225
  Contact a-length         : 0.0199846
  Contact b-length         : 0.00242986
  Contact area             : 0.000152555
  Distance to Corner       : 0.00477609
  Effective Speed Factor   : 2.659
  Load-Life Factor         : 8.78009
                                        7
  Expected Average Life    : 2.25829 10
```

```
=========================
Summary of Performance
=========================

 Applied Angular Twist (degrees) : 0.395194

 Total Internal Loads (Fx,Fy,Fz)
 Primary Disk                    : {-330.919, 60.102, -505.545}
 Intermediate Disk               : {12.0743, -23.0543, -23.7645}
 Secondary Disk                  : {319.988, -41.609, 531.859}

 Total Axial Torque (Tz)
 Primary Disk                    : 31.7733
 Intermediate Disk               : 1190.9
 Secondary Disk                  : -1200.

 Torque Ratio: Ds/Dp             : 37.7675
 Torque Ratio: Di/Dp             : 37.4811
 Torque Ratio: Di/Ds             : 0.992416

 Tosional Stiffness (T/rad)      : 173977.

 Average Residual Force          : {-0.0317412, 0.126704, -0.0708137}
                                          -6
 Average Displacement Residual   : 1.21371 10

 Dp Speed                        : 10.
 Ds Speed                        : 0.27027
 Speed Conversion Ratio          : 37.
 Effective N.D. Speed            : 20.
 Minimum Expected Average Life
                                            7
                          hours  : 3.40281 10
                          years  : 3884.49

  Average Load-Life Factor: Dp   : 10.5036
  Average Load-Life Factor: Di   : 15.3547
  Average Load-Life Factor: Ds   : 8.6056
```

```
==========================
Summary of Extreme Values
==========================

 Maximum Compressive Contact Stress Dp : -230767.
 At ball number                        : 35
 Maximum Compressive Contact Stress Di : -201066.
 At ball number                        : 36
 Maximum Compressive Contact Stress Ds : -238991.
 At ball number                        : 36

 Maximum Ball Deflection Dp            : 0.000125153
 At ball number                        : 35
 Maximum Ball Deflection Di            : 0.0000950156
 At ball number                        : 36
 Maximum Ball Deflection Ds            : 0.000141442
 At ball number                        : 35

 Maximum Ball Contact Area Dp          : 0.00014225
 At ball number                        : 35
 Maximum Ball Contact Area Di          : 0.000107999
 At ball number                        : 36
 Maximum Ball Contact Area Ds          : 0.000160781
 At ball number                        : 35

 Maximum Ball a-patch Dp               : 0.0192974
 At ball number                        : 35
 Maximum Ball a-patch Di               : 0.0168142
 At ball number                        : 36
 Maximum Ball a-patch Ds               : 0.0205148
 At ball number                        : 35

 Maximum Ball b-patch Dp               : 0.0023464
 At ball number                        : 35
 Maximum Ball b-patch Di               : 0.00204453
 At ball number                        : 36
 Maximum Ball b-patch Ds               : 0.0024947
 At ball number                        : 35

 Minimum Distance to Dp Corner         : 0.00546327
 At ball number                        : 35
 Minimum Distance to Di Corner: Dp     : 0.00943585
 At ball number                        : 36
 Minimum Distance to Di Corner: Ds     : 0.00943585
 At ball number                        : 36
 Minimum Distance to Ds Corner         : 0.00424591
 At ball number                        : 35

==========================
==========================
```

Appendix-C: Numerical Results Detailed Report

Numerical Results Detailed Report

A detailed numerical study is presented in this appendix for several variations of the SYNKdrive design. The flank angle variations involve equal flank angles on both the primary and secondary disks. The conformity variations involve the primary, secondary and intermediate disks. This study was used as the source of numerical data for the design curve plots presented in the SBIR final report. This numerical study total twenty-eight (28) separate detailed calculations for the SBIR application of the SYNKdrive to the rotary table design. The numerical study was divided into the groups labeled A, B, C and D for the level of conformity including flat races, 51%, 52% and 53% conformity, respectively. For each group, the flank angles on the primary and secondary disks were varied in increments of five (5) degrees from twenty (25) degrees to fifty-five (55) degrees to generate the design curve profiles. Printed here are the detailed results of group C, 52% comformity. Details of the other results are available upon request.

A. Flat Race:

Case-1: Flank Angle: 25 degrees
Case-2: Flank Angle: 30 degrees
Case-3: Flank Angle: 35 degrees
Case-4: Flank Angle: 40 degrees
Case-5: Flank Angle: 45 degrees
Case-6: Flank Angle: 50 degrees
Case-7: Flank Angle: 55 degrees

B. Race Conformity: 51%

Case-1: Flank Angle: 25 degrees
Case-2: Flank Angle: 30 degrees
Case-3: Flank Angle: 35 degrees
Case-4: Flank Angle: 40 degrees
Case-5: Flank Angle: 45 degrees
Case-6: Flank Angle: 50 degrees
Case-7: Flank Angle: 55 degrees

C. Race Conformity: 52%

Case-1: Flank Angle: 25 degrees

Case-2: Flank Angle: 30 degrees

Case-3: Flank Angle: 35 degrees

Case-4: Flank Angle: 40 degrees

Case-5: Flank Angle: 45 degrees

Case-6: Flank Angle: 50 degrees

Case-7: Flank Angle: 55 degrees

D. Race Conformity: 53%

Case-1: Flank Angle: 25 degrees

Case-2: Flank Angle: 30 degrees

Case-3: Flank Angle: 35 degrees

Case-4: Flank Angle: 40 degrees

Case-5: Flank Angle: 45 degrees

Case-6: Flank Angle: 50 degrees

Case-7: Flank Angle: 55 degrees

SYNKdrive^{tm} Speed Conversion Technology

Analytical and Numerical Results

Precision Speed Reducer for Robotics and Manufacturing (TRP-93-009)

Conforming Race Design
Conforming Percentage: 52%
Flank Angle: 25 degrees
Applied Torque: 1200 in-lbs

1.0 Geometric Definition

```
Summary of Conforming Race Parameters
-------------------------------------
BallDiameter                    = 0.15625

ConformingDiameter              = 0.1625
ConformingPercentage            = 52.

PrimaryFlankAngleDegrees        = 25.
IntermediateFlankAngleDegrees   = 0.
SecondaryFlankAngleDegrees      = 25.

PrimaryFractionBallDepth        = 0.3
SecondaryFractionBallDepth      = 0.3

ToleranceFraction               = 0.01

ContactToCornerDistance for Dp = 0.00194973
ContactToCornerDistance for Ds = 0.00194973
```

```
Summary of Primary Disk Parameters
-----------------------------------
PrimaryDiskThickness            = 0.5
PrimaryDiskDiameter             = 6.

PrimaryRadiusMax                = 2.5
PrimaryRadiusMin                = 2.28125
PrimaryDisplacement             = 0.21875

PrimaryPhiIncrement             = 180.
PrimaryNumberLobes              = 1


Summary of Intermediate Disk Parameters
---------------------------------------
IntermediateDiskThickness       = 0.0525
IntermediateDiskDiameter        = 6.

IntermediateRadiusMax           = 2.5
IntermediateRadiusMin           = 2.28125
IntermediateDisplacement        = 0.21875
IntermediateSlotWidth           = 0.15625

IntermediateTotalSlots          = 36
IntermediateGammaIncrement      = 10.


Summary of Secondary Disk Parameters
-----------------------------------
SecondaryDiskThickness          = 0.5
SecondaryDiskDiameter           = 6.

SecondaryRadiusMax              = 2.5
SecondaryRadiusMin              = 2.28125
SecondaryDisplacement           = 0.21875

SecondaryPhiIncrement           = 4.86486
SecondaryNumberLobes            = 37
```

2.0 Ball Race Section Profile

Primary and Secondary Race Profiles

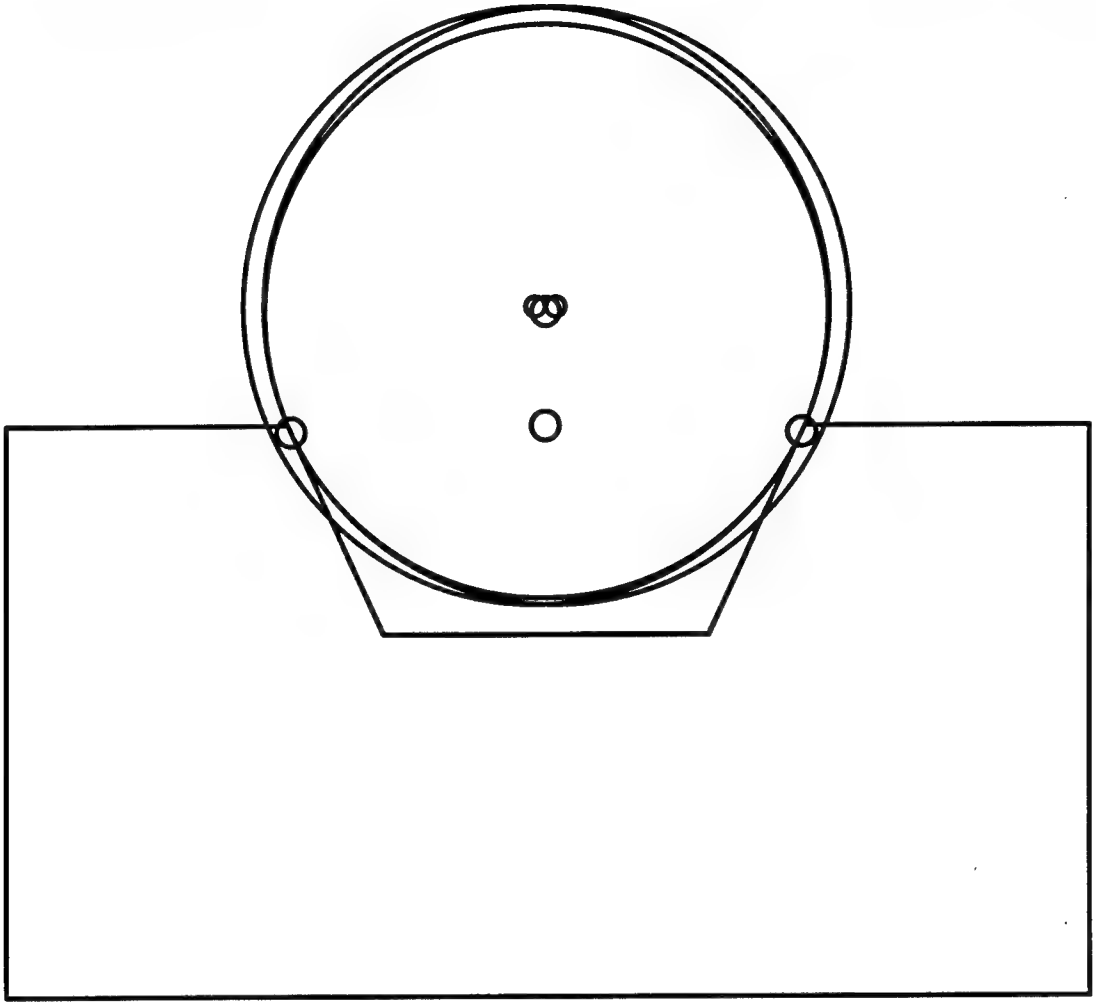

3.0 Constraints and Kinematic Results

```
Summary of Drive Constraint Parameters
--------------------------------------
PrimaryNumberLobes              = 1
SecondaryNumberLobes            = 37
IntermediateTotalSlots          = 36 (requested balls)

BallConjugateDirection          = forward drive
BallConstraintCondition         = exactly constrained

Conjugate constraints           = 36
Forward drive condition         = 36
Reverser drive condition        = 38
Predicted speed ratio           = 37 to 1


Summary of Kinematic Solver Results
-----------------------------------
PrimaryAngleStart               = 0.
PrimaryAngleFinish              = 5.
PrimaryAngleDelta               = 1.
PrimaryAngleNumber              = 6.
Speed Conversion Ratio (Dp:Ds) = 37. to 1

PrimaryDiskDeltaAngle:
   Step          Dp Angle          Ds Angle
   ----          --------          --------
                                           -17
    1              0.              2.77556 10
    2              1.              0.027027
    3              2.              0.0540541
    4              3.              0.0810811
    5              4.              0.108108
    6              5.              0.135135
```

4.0 Numerical Results

```
================================================
Summary of Stress and Displacement Calculations
================================================
 Calculated for kinematic solution : 6
 Angular Deformation               : 0.319435
 Applied Torque                    : 1199.6
```

```
=========================
 Ball number          : 1
 Ball angle           : 350.
 Ball position        : {-0.21683, 2.47838, 0.}
 Solution current?    : Yes
 Ball activity        : ON
 Ball request         : solve
 Cross over angle         : 44.3861
 Residual Force Vector    : {-0.0130935, 0.476324, -0.245859}
                                        -6
 Displacement Residual    : 1.80386 10
****
 Contact name             : DpCo
  Max Normal Load         : 15.0374
  Max Normal Stress       : -205369.
  Displacement            : 0.0000991304
  Contact a-length        : 0.0171744
  Contact b-length        : 0.00208841
  Contact area            : 0.00011268
  Distance to Corner      : -0.0152246
  Effective Speed Factor  : 2.659
  Load-Life Factor        : 14.1461
                                      8
  Expected Average Life   : 1.52169 10
****
 Contact name             : DiCi
  Max Normal Load         : 14.3581
  Max Normal Stress       : -199715.
  Displacement            : 0.0000937432
  Contact a-length        : 0.0167012
  Contact b-length        : 0.0020308
  Contact area            : 0.000106552
  Distance to Corner: Dp  : 0.00954881
  Distance to Corner: Ds  : 0.00954881
  Effective Speed Factor  : 2.659
  Load-Life Factor        : 14.8153
                                      8
  Expected Average Life   : 1.83076 10
****
 Contact name             : DsCi
  Max Normal Load         : 20.5531
  Max Normal Stress       : -225302.
  Displacement            : 0.000119289
  Contact a-length        : 0.0188399
  Contact b-length        : 0.00229068
  Contact area            : 0.000135579
  Distance to Corner      : -0.0168901
  Effective Speed Factor  : 2.659
  Load-Life Factor        : 10.3498
                                      7
  Expected Average Life   : 4.3602 10
```

```
=========================
 Ball number          : 2
 Ball angle           : 340.
 Ball position        : {-0.640757, 2.39134, 0.}
 Solution current?    : Yes
 Ball activity        : ON
 Ball request         : solve
 Cross over angle          : 44.5038
 Residual Force Vector     : {-0.106875, 0.457467, -0.244139}
                                                  -6
 Displacement Residual     : 1.76127 10
****
 Contact name              : DpCo
  Max Normal Load          : 14.9706
  Max Normal Stress        : -205041.
  Displacement             : 0.0000988144
  Contact a-length         : 0.017147
  Contact b-length         : 0.00208507
  Contact area             : 0.00011232
  Distance to Corner       : -0.0151972
  Effective Speed Factor   : 2.659
  Load-Life Factor         : 14.2092
                                        8
  Expected Average Life    : 1.54904 10
****
 Contact name              : DiCi
  Max Normal Load          : 14.334
  Max Normal Stress        : -199655.
  Displacement             : 0.0000936869
  Contact a-length         : 0.0166962
  Contact b-length         : 0.00203019
  Contact area             : 0.000106489
  Distance to Corner: Dp   : 0.00955382
  Distance to Corner: Ds   : 0.00955382
  Effective Speed Factor   : 2.659
  Load-Life Factor         : 14.8403
                                        8
  Expected Average Life    : 1.8431 10
****
 Contact name              : DsCi
  Max Normal Load          : 20.4955
  Max Normal Stress        : -225080.
  Displacement             : 0.000119053
  Contact a-length         : 0.0188213
  Contact b-length         : 0.00228842
  Contact area             : 0.000135311
  Distance to Corner       : -0.0168716
  Effective Speed Factor   : 2.659
  Load-Life Factor         : 10.3789
                                        7
  Expected Average Life    : 4.40942 10
```

```
==========================
 Ball number          : 3
 Ball angle           : 330.
 Ball position        : {-1.04114, 2.23273, 0.}
 Solution current?    : Yes
 Ball activity        : ON
 Ball request         : solve
 Cross over angle          : 44.622
 Residual Force Vector     : {-0.194035, 0.420697, -0.242343}
                                                  -6
 Displacement Residual     : 1.71893 10
****
 Contact name              : DpCo
  Max Normal Load          : 14.9036
  Max Normal Stress        : -204711.
  Displacement             : 0.0000984967
  Contact a-length         : 0.0171194
  Contact b-length         : 0.00208172
  Contact area             : 0.000111959
  Distance to Corner       : -0.0151697
  Effective Speed Factor   : 2.659
  Load-Life Factor         : 14.273
                                        8
  Expected Average Life    : 1.57707 10
****
 Contact name              : DiCi
  Max Normal Load          : 14.3096
  Max Normal Stress        : -199594.
  Displacement             : 0.0000936293
  Contact a-length         : 0.016691
  Contact b-length         : 0.00202956
  Contact area             : 0.000106423
  Distance to Corner: Dp   : 0.00955896
  Distance to Corner: Ds   : 0.00955896
  Effective Speed Factor   : 2.659
  Load-Life Factor         : 14.8655
                                        8
  Expected Average Life    : 1.8557 10
****
 Contact name              : DsCi
  Max Normal Load          : 20.4376
  Max Normal Stress        : -224856.
  Displacement             : 0.000118817
  Contact a-length         : 0.0188026
  Contact b-length         : 0.00228614
  Contact area             : 0.000135043
  Distance to Corner       : -0.0168529
  Effective Speed Factor   : 2.659
  Load-Life Factor         : 10.4083
                                        7
  Expected Average Life    : 4.45965 10
```

```
=========================
 Ball number          : 4
 Ball angle           : 320.
 Ball position        : {-1.40606, 2.00806, 0.}
 Solution current?    : Yes
 Ball activity        : ON
 Ball request         : solve
 Cross over angle         : 44.7408
 Residual Force Vector    : {-0.271242, 0.367824, -0.240468}
                                          -6
 Displacement Residual    : 1.67687 10
****
 Contact name             : DpCo
  Max Normal Load         : 14.8365
  Max Normal Stress       : -204379.
  Displacement            : 0.0000981775
  Contact a-length        : 0.0170916
  Contact b-length        : 0.00207834
  Contact area            : 0.000111596
  Distance to Corner      : -0.0151419
  Effective Speed Factor  : 2.659
  Load-Life Factor        : 14.3376
                                        8
  Expected Average Life   : 1.60579 10
****
 Contact name             : DiCi
  Max Normal Load         : 14.2849
  Max Normal Stress       : -199531.
  Displacement            : 0.0000935702
  Contact a-length        : 0.0166858
  Contact b-length        : 0.00202892
  Contact area            : 0.000106356
  Distance to Corner: Dp  : 0.00956422
  Distance to Corner: Ds  : 0.00956422
  Effective Speed Factor  : 2.659
  Load-Life Factor        : 14.8912
                                        8
  Expected Average Life   : 1.86855 10
****
 Contact name             : DsCi
  Max Normal Load         : 20.3792
  Max Normal Stress       : -224631.
  Displacement            : 0.000118579
  Contact a-length        : 0.0187837
  Contact b-length        : 0.00228385
  Contact area            : 0.000134772
  Distance to Corner      : -0.016834
  Effective Speed Factor  : 2.659
  Load-Life Factor        : 10.4381
                                        7
  Expected Average Life   : 4.51092 10
```

```
=========================
 Ball number          : 5
 Ball angle           : 310.
 Ball position        : {-1.7248, 1.7248, 0.}
 Solution current?    : Yes
 Ball activity        : ON
 Ball request         : solve
 Cross over angle          : 44.86
 Residual Force Vector     : {-0.335607, 0.30126, -0.238516}
                                                  -6
 Displacement Residual     : 1.63512 10
****
 Contact name              : DpCo
  Max Normal Load          : 14.7693
  Max Normal Stress        : -204045.
  Displacement             : 0.0000978568
  Contact a-length         : 0.0170637
  Contact b-length         : 0.00207494
  Contact area             : 0.000111232
  Distance to Corner       : -0.015114
  Effective Speed Factor   : 2.659
  Load-Life Factor         : 14.4028
                                        8
  Expected Average Life    : 1.63522 10
****
 Contact name              : DiCi
  Max Normal Load          : 14.26
  Max Normal Stress        : -199467.
  Displacement             : 0.0000935098
  Contact a-length         : 0.0166804
  Contact b-length         : 0.00202827
  Contact area             : 0.000106287
  Distance to Corner: Dp   : 0.00956961
  Distance to Corner: Ds   : 0.00956961
  Effective Speed Factor   : 2.659
  Load-Life Factor         : 14.9173
                                        8
  Expected Average Life    : 1.88167 10
****
 Contact name              : DsCi
  Max Normal Load          : 20.3206
  Max Normal Stress        : -224404.
  Displacement             : 0.00011834
  Contact a-length         : 0.0187648
  Contact b-length         : 0.00228155
  Contact area             : 0.0001345
  Distance to Corner       : -0.0168151
  Effective Speed Factor   : 2.659
  Load-Life Factor         : 10.4682
                                        7
  Expected Average Life    : 4.56326 10
```

```
=========================
 Ball number          : 6
 Ball angle           : 300.
 Ball position        : {-1.98815, 1.39212, 0.}
 Solution current?    : Yes
 Ball activity        : ON
 Ball request         : solve
 Cross over angle          : 44.9798
 Residual Force Vector     : {-0.384789, 0.223922, -0.236483}
                                          -6
 Displacement Residual     : 1.59372 10
****
 Contact name              : DpCo
  Max Normal Load          : 14.7019
  Max Normal Stress        : -203709.
  Displacement             : 0.0000975345
  Contact a-length         : 0.0170356
  Contact b-length         : 0.00207152
  Contact area             : 0.000110865
  Distance to Corner       : -0.0150858
  Effective Speed Factor   : 2.659
  Load-Life Factor         : 14.4688
                                        8
  Expected Average Life    : 1.6654 10
****
 Contact name              : DiCi
  Max Normal Load          : 14.2347
  Max Normal Stress        : -199401.
  Displacement             : 0.0000934479
  Contact a-length         : 0.0166749
  Contact b-length         : 0.0020276
  Contact area             : 0.000106217
  Distance to Corner: Dp   : 0.00957513
  Distance to Corner: Ds   : 0.00957513
  Effective Speed Factor   : 2.659
  Load-Life Factor         : 14.9437
                                        8
  Expected Average Life    : 1.89505 10
****
 Contact name              : DsCi
  Max Normal Load          : 20.2615
  Max Normal Stress        : -224175.
  Displacement             : 0.000118099
  Contact a-length         : 0.0187457
  Contact b-length         : 0.00227922
  Contact area             : 0.000134227
  Distance to Corner       : -0.016796
  Effective Speed Factor   : 2.659
  Load-Life Factor         : 10.4987
                                        7
  Expected Average Life    : 4.61669 10
```

```
==========================
 Ball number          : 7
 Ball angle           : 290.
 Ball position        : {-2.18867, 1.02059, 0.}
 Solution current?    : Yes
 Ball activity        : ON
 Ball request         : solve
 Cross over angle          : 45.1001
 Residual Force Vector     : {-0.417078, 0.139109, -0.234371}
                                          -6
 Displacement Residual     : 1.55272 10
****
 Contact name              : DpCo
  Max Normal Load          : 14.6345
  Max Normal Stress        : -203371.
  Displacement             : 0.0000972106
  Contact a-length         : 0.0170073
  Contact b-length         : 0.00206808
  Contact area             : 0.000110497
  Distance to Corner       : -0.0150575
  Effective Speed Factor   : 2.659
  Load-Life Factor         : 14.5355
                                        8
  Expected Average Life    : 1.69633 10
****
 Contact name              : DiCi
  Max Normal Load          : 14.2092
  Max Normal Stress        : -199333.
  Displacement             : 0.0000933846
  Contact a-length         : 0.0166692
  Contact b-length         : 0.00202691
  Contact area             : 0.000106145
  Distance to Corner: Dp   : 0.00958078
  Distance to Corner: Ds   : 0.00958078
  Effective Speed Factor   : 2.659
  Load-Life Factor         : 14.9706
                                        8
  Expected Average Life    : 1.90871 10
****
 Contact name              : DsCi
  Max Normal Load          : 20.2021
  Max Normal Stress        : -223946.
  Displacement             : 0.000117857
  Contact a-length         : 0.0187265
  Contact b-length         : 0.00227689
  Contact area             : 0.000133951
  Distance to Corner       : -0.0167767
  Effective Speed Factor   : 2.659
  Load-Life Factor         : 10.5296
                                        7
  Expected Average Life    : 4.67124 10
```

```
==========================
 Ball number          : 8
 Ball angle           : 280.
 Ball position        : {-2.32091, 0.621885, 0.}
 Solution current?    : Yes
 Ball activity        : ON
 Ball request         : solve
 Cross over angle          : 45.2209
 Residual Force Vector     : {-0.431461, 0.0503737, -0.232177}
                                                  -6
 Displacement Residual     : 1.51215 10
****
 Contact name              : DpCo
  Max Normal Load          : 14.5669
  Max Normal Stress        : -203030.
  Displacement             : 0.0000968852
  Contact a-length         : 0.0169788
  Contact b-length         : 0.00206462
  Contact area             : 0.000110127
  Distance to Corner       : -0.015029
  Effective Speed Factor   : 2.659
  Load-Life Factor         : 14.603
                                        8
  Expected Average Life    : 1.72804 10
****
 Contact name              : DiCi
  Max Normal Load          : 14.1834
  Max Normal Stress        : -199264.
  Displacement             : 0.0000933199
  Contact a-length         : 0.0166634
  Contact b-length         : 0.00202621
  Contact area             : 0.000106071
  Distance to Corner: Dp   : 0.00958656
  Distance to Corner: Ds   : 0.00958656
  Effective Speed Factor   : 2.659
  Load-Life Factor         : 14.9979
                                        8
  Expected Average Life    : 1.92265 10
****
 Contact name              : DsCi
  Max Normal Load          : 20.1423
  Max Normal Stress        : -223714.
  Displacement             : 0.000117613
  Contact a-length         : 0.0187071
  Contact b-length         : 0.00227453
  Contact area             : 0.000133675
  Distance to Corner       : -0.0167574
  Effective Speed Factor   : 2.659
  Load-Life Factor         : 10.5609
                                        7
  Expected Average Life    : 4.72695 10
```

```
=========================
 Ball number          : 9
 Ball angle           : 270.
 Ball position        : {-2.38153, 0.208357, 0.}
 Solution current?    : Yes
 Ball activity        : ON
 Ball request         : solve
 Cross over angle          : 45.3422
 Residual Force Vector     : {-0.427644, -0.0386243, -0.2299}
                                          -6
 Displacement Residual     : 1.47209 10
****
 Contact name              : DpCo
  Max Normal Load          : 14.4991
  Max Normal Stress        : -202687.
  Displacement             : 0.0000965582
  Contact a-length         : 0.0169501
  Contact b-length         : 0.00206113
  Contact area             : 0.000109756
  Distance to Corner       : -0.0150004
  Effective Speed Factor   : 2.659
  Load-Life Factor         : 14.6712
                                        8
  Expected Average Life    : 1.76055 10
****
 Contact name              : DiCi
  Max Normal Load          : 14.1572
  Max Normal Stress        : -199193.
  Displacement             : 0.0000932537
  Contact a-length         : 0.0166575
  Contact b-length         : 0.00202549
  Contact area             : 0.000105996
  Distance to Corner: Dp   : 0.00959247
  Distance to Corner: Ds   : 0.00959247
  Effective Speed Factor   : 2.659
  Load-Life Factor         : 15.0255
                                        8
  Expected Average Life    : 1.93689 10
****
 Contact name              : DsCi
  Max Normal Load          : 20.0821
  Max Normal Stress        : -223481.
  Displacement             : 0.000117369
  Contact a-length         : 0.0186876
  Contact b-length         : 0.00227217
  Contact area             : 0.000133396
  Distance to Corner       : -0.0167379
  Effective Speed Factor   : 2.659
  Load-Life Factor         : 10.5925
                                        7
  Expected Average Life    : 4.78384 10
```

```
=========================
 Ball number          : 10
 Ball angle           : 260.
 Ball position        : {-2.36942, -0.207298, 0.}
 Solution current?    : Yes
 Ball activity        : ON
 Ball request         : solve
 Cross over angle          : 45.464
 Residual Force Vector     : {-0.406068, -0.124259, -0.227541}
                                                  -6
 Displacement Residual     : 1.43258 10
****
 Contact name              : DpCo
  Max Normal Load          : 14.4313
  Max Normal Stress        : -202342.
  Displacement             : 0.0000962297
  Contact a-length         : 0.0169212
  Contact b-length         : 0.00205762
  Contact area             : 0.000109382
  Distance to Corner       : -0.0149715
  Effective Speed Factor   : 2.659
  Load-Life Factor         : 14.7402
                                        8
  Expected Average Life    : 1.79389 10
****
 Contact name              : DiCi
  Max Normal Load          : 14.1308
  Max Normal Stress        : -199121.
  Displacement             : 0.000093186
  Contact a-length         : 0.0166515
  Contact b-length         : 0.00202475
  Contact area             : 0.000105919
  Distance to Corner: Dp   : 0.00959852
  Distance to Corner: Ds   : 0.00959852
  Effective Speed Factor   : 2.659
  Load-Life Factor         : 15.0536
                                        8
  Expected Average Life    : 1.95141 10
****
 Contact name              : DsCi
  Max Normal Load          : 20.0216
  Max Normal Stress        : -223246.
  Displacement             : 0.000117122
  Contact a-length         : 0.018668
  Contact b-length         : 0.00226978
  Contact area             : 0.000133116
  Distance to Corner       : -0.0167183
  Effective Speed Factor   : 2.659
  Load-Life Factor         : 10.6245
                                        7
  Expected Average Life    : 4.84196 10
```

```
=========================
 Ball number          : 11
 Ball angle           : 250.
 Ball position        : {-2.28569, -0.612449, 0.}
 Solution current?    : Yes
 Ball activity        : ON
 Ball request         : solve
 Cross over angle          : 45.5863
 Residual Force Vector     : {-0.367875, -0.203081, -0.225096}
                                                  -6
 Displacement Residual     : 1.39369 10
****
 Contact name              : DpCo
  Max Normal Load          : 14.3633
  Max Normal Stress        : -201995.
  Displacement             : 0.0000958995
  Contact a-length         : 0.0168922
  Contact b-length         : 0.00205409
  Contact area             : 0.000109007
  Distance to Corner       : -0.0149424
  Effective Speed Factor   : 2.659
  Load-Life Factor         : 14.8099
                                        8
  Expected Average Life    : 1.82809 10
****
 Contact name              : DiCi
  Max Normal Load          : 14.1041
  Max Normal Stress        : -199047.
  Displacement             : 0.0000931168
  Contact a-length         : 0.0166453
  Contact b-length         : 0.002024
  Contact area             : 0.00010584
  Distance to Corner: Dp   : 0.0096047
  Distance to Corner: Ds   : 0.0096047
  Effective Speed Factor   : 2.659
  Load-Life Factor         : 15.0822
                                        8
  Expected Average Life    : 1.96625 10
****
 Contact name              : DsCi
  Max Normal Load          : 19.9607
  Max Normal Stress        : -223010.
  Displacement             : 0.000116874
  Contact a-length         : 0.0186483
  Contact b-length         : 0.00226738
  Contact area             : 0.000132835
  Distance to Corner       : -0.0166985
  Effective Speed Factor   : 2.659
  Load-Life Factor         : 10.6569
                                        7
  Expected Average Life    : 4.90133 10
```

```
=========================
 Ball number          : 12
 Ball angle           : 240.
 Ball position        : {-2.1336, -0.994914, 0.}
 Solution current?    : Yes
 Ball activity        : ON
 Ball request         : solve
 Cross over angle          : 45.7092
 Residual Force Vector     : {-0.314864, -0.271953, -0.222567}
                                                  -6
 Displacement Residual     : 1.35549 10
****
 Contact name              : DpCo
  Max Normal Load          : 14.2952
  Max Normal Stress        : -201645.
  Displacement             : 0.0000955678
  Contact a-length         : 0.0168629
  Contact b-length         : 0.00205053
  Contact area             : 0.00010863
  Distance to Corner       : -0.0149132
  Effective Speed Factor   : 2.659
  Load-Life Factor         : 14.8805
                                        8
  Expected Average Life    : 1.86317 10
****
 Contact name              : DiCi
  Max Normal Load          : 14.0771
  Max Normal Stress        : -198971.
  Displacement             : 0.000093046
  Contact a-length         : 0.016639
  Contact b-length         : 0.00202323
  Contact area             : 0.00010576
  Distance to Corner: Dp   : 0.00961103
  Distance to Corner: Ds   : 0.00961103
  Effective Speed Factor   : 2.659
  Load-Life Factor         : 15.1111
                                        8
  Expected Average Life    : 1.98139 10
****
 Contact name              : DsCi
  Max Normal Load          : 19.8994
  Max Normal Stress        : -222772.
  Displacement             : 0.000116625
  Contact a-length         : 0.0186284
  Contact b-length         : 0.00226496
  Contact area             : 0.000132552
  Distance to Corner       : -0.0166786
  Effective Speed Factor   : 2.659
  Load-Life Factor         : 10.6898
                                        7
  Expected Average Life    : 4.96199 10
```

```
=========================
 Ball number          : 13
 Ball angle           : 230.
 Ball position        : {-1.91847, -1.34332, 0.}
 Solution current?    : Yes
 Ball activity        : ON
 Ball request         : solve
 Cross over angle          : 45.8326
 Residual Force Vector     : {-0.24941, -0.328171, -0.219951}
                                                  -6
 Displacement Residual     : 1.31808 10
****
 Contact name              : DpCo
  Max Normal Load          : 14.227
  Max Normal Stress        : -201293.
  Displacement             : 0.0000952345
  Contact a-length         : 0.0168335
  Contact b-length         : 0.00204695
  Contact area             : 0.000108251
  Distance to Corner       : -0.0148838
  Effective Speed Factor   : 2.659
  Load-Life Factor         : 14.9518
                                        8
  Expected Average Life    : 1.89915 10
****
 Contact name              : DiCi
  Max Normal Load          : 14.0497
  Max Normal Stress        : -198894.
  Displacement             : 0.0000929738
  Contact a-length         : 0.0166325
  Contact b-length         : 0.00202245
  Contact area             : 0.000105678
  Distance to Corner: Dp   : 0.00961749
  Distance to Corner: Ds   : 0.00961749
  Effective Speed Factor   : 2.659
  Load-Life Factor         : 15.1405
                                        8
  Expected Average Life    : 1.99685 10
****
 Contact name              : DsCi
  Max Normal Load          : 19.8378
  Max Normal Stress        : -222533.
  Displacement             : 0.000116375
  Contact a-length         : 0.0186083
  Contact b-length         : 0.00226253
  Contact area             : 0.000132267
  Distance to Corner       : -0.0166586
  Effective Speed Factor   : 2.659
  Load-Life Factor         : 10.723
                                        7
  Expected Average Life    : 5.02397 10
```

```
=========================
 Ball number          : 14
 Ball angle           : 220.
 Ball position        : {-1.64746, -1.64746, 0.}
 Solution current?    : Yes
 Ball activity        : ON
 Ball request         : solve
 Cross over angle          : 45.9565
 Residual Force Vector     : {-0.174368, -0.369567, -0.217248}
                                                  -6
 Displacement Residual     : 1.28153 10
****
 Contact name              : DpCo
  Max Normal Load          : 14.1587
  Max Normal Stress        : -200939.
  Displacement             : 0.0000948997
  Contact a-length         : 0.0168039
  Contact b-length         : 0.00204335
  Contact area             : 0.00010787
  Distance to Corner       : -0.0148542
  Effective Speed Factor   : 2.659
  Load-Life Factor         : 15.0239
                                        8
  Expected Average Life    : 1.93606 10
****
 Contact name              : DiCi
  Max Normal Load          : 14.0221
  Max Normal Stress        : -198815.
  Displacement             : 0.0000929
  Contact a-length         : 0.0166259
  Contact b-length         : 0.00202164
  Contact area             : 0.000105594
  Distance to Corner: Dp   : 0.00962409
  Distance to Corner: Ds   : 0.00962409
  Effective Speed Factor   : 2.659
  Load-Life Factor         : 15.1703
                                        8
  Expected Average Life    : 2.01263 10
****
 Contact name              : DsCi
  Max Normal Load          : 19.7757
  Max Normal Stress        : -222292.
  Displacement             : 0.000116123
  Contact a-length         : 0.0185882
  Contact b-length         : 0.00226007
  Contact area             : 0.00013198
  Distance to Corner       : -0.0166385
  Effective Speed Factor   : 2.659
  Load-Life Factor         : 10.7566
                                        7
  Expected Average Life    : 5.08732 10
```

```
=========================
 Ball number          : 15
 Ball angle           : 210.
 Ball position        : {-1.32938, -1.89856, 0.}
 Solution current?    : Yes
 Ball activity        : ON
 Ball request         : solve
 Cross over angle          : 46.0809
 Residual Force Vector     : {-0.0929543, -0.394592, -0.214456}
                                                  -6
 Displacement Residual     : 1.24597 10
****
 Contact name              : DpCo
  Max Normal Load          : 14.0903
  Max Normal Stress        : -200582.
  Displacement             : 0.0000945632
  Contact a-length         : 0.0167741
  Contact b-length         : 0.00203972
  Contact area             : 0.000107488
  Distance to Corner       : -0.0148243
  Effective Speed Factor   : 2.659
  Load-Life Factor         : 15.0969
                                        8
  Expected Average Life    : 1.97394 10
****
 Contact name              : DiCi
  Max Normal Load          : 13.9942
  Max Normal Stress        : -198734.
  Displacement             : 0.0000928247
  Contact a-length         : 0.0166192
  Contact b-length         : 0.00202082
  Contact area             : 0.000105508
  Distance to Corner: Dp   : 0.00963083
  Distance to Corner: Ds   : 0.00963083
  Effective Speed Factor   : 2.659
  Load-Life Factor         : 15.2006
                                        8
  Expected Average Life    : 2.02875 10
****
 Contact name              : DsCi
  Max Normal Load          : 19.7133
  Max Normal Stress        : -222049.
  Displacement             : 0.000115869
  Contact a-length         : 0.0185679
  Contact b-length         : 0.00225761
  Contact area             : 0.000131692
  Distance to Corner       : -0.0166181
  Effective Speed Factor   : 2.659
  Load-Life Factor         : 10.7907
                                        7
  Expected Average Life    : 5.15206 10
```

```
=========================
 Ball number          : 16
 Ball angle           : 200.
 Ball position        : {-0.97437, -2.08954, 0.}
 Solution current?    : Yes
 Ball activity        : ON
 Ball request         : solve
 Cross over angle          : 46.2058
 Residual Force Vector     : {-0.00861936, -0.402373, -0.211576}
                                                  -6
 Displacement Residual     : 1.21148 10
****
 Contact name              : DpCo
  Max Normal Load          : 14.0218
  Max Normal Stress        : -200224.
  Displacement             : 0.0000942252
  Contact a-length         : 0.0167441
  Contact b-length         : 0.00203608
  Contact area             : 0.000107104
  Distance to Corner       : -0.0147943
  Effective Speed Factor   : 2.659
  Load-Life Factor         : 15.1707
                                        8
  Expected Average Life    : 2.01281 10
****
 Contact name              : DiCi
  Max Normal Load          : 13.9659
  Max Normal Stress        : -198652.
  Displacement             : 0.0000927477
  Contact a-length         : 0.0166123
  Contact b-length         : 0.00201998
  Contact area             : 0.000105421
  Distance to Corner: Dp   : 0.00963772
  Distance to Corner: Ds   : 0.00963772
  Effective Speed Factor   : 2.659
  Load-Life Factor         : 15.2314
                                        8
  Expected Average Life    : 2.04521 10
****
 Contact name              : DsCi
  Max Normal Load          : 19.6505
  Max Normal Stress        : -221804.
  Displacement             : 0.000115614
  Contact a-length         : 0.0185474
  Contact b-length         : 0.00225512
  Contact area             : 0.000131402
  Distance to Corner       : -0.0165977
  Effective Speed Factor   : 2.659
  Load-Life Factor         : 10.8252
                                        7
  Expected Average Life    : 5.21825 10
```

```
=========================
 Ball number          : 17
 Ball angle           : 190.
 Ball position        : {-0.593576, -2.21526, 0.}
 Solution current?    : Yes
 Ball activity        : ON
 Ball request         : solve
 Cross over angle          : 46.3313
 Residual Force Vector     : {0.0750935, -0.392745, -0.208605}
                                          -6
 Displacement Residual     : 1.17821 10
****
 Contact name              : DpCo
  Max Normal Load          : 13.9532
  Max Normal Stress        : -199862.
  Displacement             : 0.0000938856
  Contact a-length         : 0.0167139
  Contact b-length         : 0.0020324
  Contact area             : 0.000106718
  Distance to Corner       : -0.0147641
  Effective Speed Factor   : 2.659
  Load-Life Factor         : 15.2453
                                        8
  Expected Average Life    : 2.0527 10
****
 Contact name              : DiCi
  Max Normal Load          : 13.9374
  Max Normal Stress        : -198568.
  Displacement             : 0.0000926692
  Contact a-length         : 0.0166052
  Contact b-length         : 0.00201913
  Contact area             : 0.000105332
  Distance to Corner: Dp   : 0.00964475
  Distance to Corner: Ds   : 0.00964475
  Effective Speed Factor   : 2.659
  Load-Life Factor         : 15.2626
                                        8
  Expected Average Life    : 2.06202 10
****
 Contact name              : DsCi
  Max Normal Load          : 19.5873
  Max Normal Stress        : -221558.
  Displacement             : 0.000115358
  Contact a-length         : 0.0185269
  Contact b-length         : 0.00225262
  Contact area             : 0.000131111
  Distance to Corner       : -0.0165771
  Effective Speed Factor   : 2.659
  Load-Life Factor         : 10.8601
                                        7
  Expected Average Life    : 5.28593 10
```

```
==========================
 Ball number          : 18
 Ball angle           : 180.
 Ball position        : {-0.198824, -2.27257, 0.}
 Solution current?    : Yes
 Ball activity        : ON
 Ball request         : solve
 Cross over angle          : 37.7833
 Residual Force Vector     : {-0.710991, 0.804888, -0.383412}
                                          -6
 Displacement Residual     : 5.54924 10
****
 Contact name              : DpCi
  Max Normal Load          : 14.7736
  Max Normal Stress        : -206210.
  Displacement             : 0.0000999349
  Contact a-length         : 0.0172439
  Contact b-length         : 0.00209672
  Contact area             : 0.000113587
  Distance to Corner       : -0.0152942
  Effective Speed Factor   : 2.659
  Load-Life Factor         : 14.3987
                                        8
  Expected Average Life    : 1.63333 10
****
 Contact name              : DiCi
  Max Normal Load          : 13.8314
  Max Normal Stress        : -193913.
  Displacement             : 0.0000883752
  Contact a-length         : 0.016216
  Contact b-length         : 0.00197179
  Contact area             : 0.000100451
  Distance to Corner: Dp   : 0.010034
  Distance to Corner: Ds   : 0.010034
  Effective Speed Factor   : 2.659
  Load-Life Factor         : 15.3795
                                        8
  Expected Average Life    : 2.12593 10
****
 Contact name              : DsCo
  Max Normal Load          : 21.3913
  Max Normal Stress        : -228709.
  Displacement             : 0.00012295
  Contact a-length         : 0.0191268
  Contact b-length         : 0.00232591
  Contact area             : 0.000139761
  Distance to Corner       : -0.0171771
  Effective Speed Factor   : 2.659
  Load-Life Factor         : 9.94425
                                        7
  Expected Average Life    : 3.71596 10
```

```
=========================
 Ball number          : 19
 Ball angle           : 170.
 Ball position        : {0.199883, -2.28468, 0.}
 Solution current?    : Yes
 Ball activity        : ON
 Ball request         : solve
 Cross over angle          : 37.6564
 Residual Force Vector     : {-0.863285, 0.665837, -0.382318}
                                                  -6
 Displacement Residual     : 5.62326 10
****
 Contact name              : DpCi
  Max Normal Load          : 14.855
  Max Normal Stress        : -206590.
  Displacement             : 0.000100304
  Contact a-length         : 0.0172757
  Contact b-length         : 0.00210059
  Contact area             : 0.000114006
  Distance to Corner       : -0.015326
  Effective Speed Factor   : 2.659
  Load-Life Factor         : 14.3198
                                        8
  Expected Average Life    : 1.59783 10
****
 Contact name              : DiCi
  Max Normal Load          : 13.8582
  Max Normal Stress        : -193953.
  Displacement             : 0.0000884114
  Contact a-length         : 0.0162193
  Contact b-length         : 0.0019722
  Contact area             : 0.000100492
  Distance to Corner: Dp   : 0.0100307
  Distance to Corner: Ds   : 0.0100307
  Effective Speed Factor   : 2.659
  Load-Life Factor         : 15.3498
                                        8
  Expected Average Life    : 2.10956 10
****
 Contact name              : DsCo
  Max Normal Load          : 21.4573
  Max Normal Stress        : -228970.
  Displacement             : 0.000123231
  Contact a-length         : 0.0191486
  Contact b-length         : 0.00232857
  Contact area             : 0.00014008
  Distance to Corner       : -0.0171989
  Effective Speed Factor   : 2.659
  Load-Life Factor         : 9.91363
                                       7
  Expected Average Life    : 3.6704 10
```

```
==========================
 Ball number          : 20
 Ball angle           : 160.
 Ball position        : {0.596722, -2.227, 0.}
 Solution current?    : Yes
 Ball activity        : ON
 Ball request         : solve
 Cross over angle          : 37.53
 Residual Force Vector     : {-0.988088, 0.498277, -0.381138}
                                          -6
 Displacement Residual     : 5.69686 10
****
 Contact name              : DpCi
  Max Normal Load          : 14.9363
  Max Normal Stress        : -206968.
  Displacement             : 0.000100671
  Contact a-length         : 0.0173073
  Contact b-length         : 0.00210443
  Contact area             : 0.000114423
  Distance to Corner       : -0.0153576
  Effective Speed Factor   : 2.659
  Load-Life Factor         : 14.2418
                                        8
  Expected Average Life    : 1.56332 10
****
 Contact name              : DiCi
  Max Normal Load          : 13.8845
  Max Normal Stress        : -193990.
  Displacement             : 0.0000884459
  Contact a-length         : 0.0162225
  Contact b-length         : 0.00197258
  Contact area             : 0.000100531
  Distance to Corner: Dp   : 0.0100275
  Distance to Corner: Ds   : 0.0100275
  Effective Speed Factor   : 2.659
  Load-Life Factor         : 15.3207
                                        8
  Expected Average Life    : 2.09362 10
****
 Contact name              : DsCo
  Max Normal Load          : 21.523
  Max Normal Stress        : -229229.
  Displacement             : 0.00012351
  Contact a-length         : 0.0191703
  Contact b-length         : 0.0023312
  Contact area             : 0.000140397
  Distance to Corner       : -0.0172205
  Effective Speed Factor   : 2.659
  Load-Life Factor         : 9.88338
                                        7
  Expected Average Life    : 3.62581 10
```

```
==========================
 Ball number          : 21
 Ball angle           : 150.
 Ball position        : {0.979506, -2.10056, 0.}
 Solution current?    : Yes
 Ball activity        : ON
 Ball request         : solve
 Cross over angle          : 37.4041
 Residual Force Vector     : {-1.08013, 0.307679, -0.379874}
                                                  -6
 Displacement Residual     : 5.77004 10
****
 Contact name              : DpCi
  Max Normal Load          : 15.0175
  Max Normal Stress        : -207343.
  Displacement             : 0.000101036
  Contact a-length         : 0.0173387
  Contact b-length         : 0.00210825
  Contact area             : 0.000114838
  Distance to Corner       : -0.015389
  Effective Speed Factor   : 2.659
  Load-Life Factor         : 14.1648
                                        8
  Expected Average Life    : 1.52978 10
****
 Contact name              : DiCi
  Max Normal Load          : 13.9104
  Max Normal Stress        : -194026.
  Displacement             : 0.0000884787
  Contact a-length         : 0.0162255
  Contact b-length         : 0.00197295
  Contact area             : 0.000100569
  Distance to Corner: Dp   : 0.0100245
  Distance to Corner: Ds   : 0.0100245
  Effective Speed Factor   : 2.659
  Load-Life Factor         : 15.2922
                                        8
  Expected Average Life    : 2.07807 10
****
 Contact name              : DsCo
  Max Normal Load          : 21.5883
  Max Normal Stress        : -229486.
  Displacement             : 0.000123787
  Contact a-length         : 0.0191918
  Contact b-length         : 0.00233382
  Contact area             : 0.000140712
  Distance to Corner       : -0.017242
  Effective Speed Factor   : 2.659
  Load-Life Factor         : 9.8535
                                        7
  Expected Average Life    : 3.58216 10
```

```
=========================
 Ball number          : 22
 Ball angle           : 140.
 Ball position        : {1.33635, -1.90851, 0.}
 Solution current?    : Yes
 Ball activity        : ON
 Ball request         : solve
 Cross over angle          : 37.2787
 Residual Force Vector     : {-1.13522, 0.100479, -0.378527}
                                          -6
 Displacement Residual     : 5.84279 10
****
 Contact name              : DpCi
  Max Normal Load          : 15.0986
  Max Normal Stress        : -207716.
  Displacement             : 0.0001014
  Contact a-length         : 0.0173699
  Contact b-length         : 0.00211203
  Contact area             : 0.000115252
  Distance to Corner       : -0.0154201
  Effective Speed Factor   : 2.659
  Load-Life Factor         : 14.0888
                                        8
  Expected Average Life    : 1.49718 10
****
 Contact name              : DiCi
  Max Normal Load          : 13.9358
  Max Normal Stress        : -194061.
  Displacement             : 0.0000885099
  Contact a-length         : 0.0162283
  Contact b-length         : 0.0019733
  Contact area             : 0.000100604
  Distance to Corner: Dp   : 0.0100217
  Distance to Corner: Ds   : 0.0100217
  Effective Speed Factor   : 2.659
  Load-Life Factor         : 15.2642
                                        8
  Expected Average Life    : 2.06293 10
****
 Contact name              : DsCo
  Max Normal Load          : 21.6532
  Max Normal Stress        : -229741.
  Displacement             : 0.000124063
  Contact a-length         : 0.0192131
  Contact b-length         : 0.00233641
  Contact area             : 0.000141025
  Distance to Corner       : -0.0172634
  Effective Speed Factor   : 2.659
  Load-Life Factor         : 9.82397
                                        7
  Expected Average Life    : 3.53942 10
```

```
==========================
 Ball number          : 23
 Ball angle           : 130.
 Ball position        : {1.65605, -1.65605, 0.}
 Solution current?    : Yes
 Ball activity        : ON
 Ball request         : solve
 Cross over angle          : 37.1539
 Residual Force Vector     : {-1.15045, -0.116144, -0.377099}
                                          -6
 Displacement Residual     : 5.91511 10
****
 Contact name              : DpCi
  Max Normal Load          : 15.1795
  Max Normal Stress        : -208086.
  Displacement             : 0.000101761
  Contact a-length         : 0.0174008
  Contact b-length         : 0.0021158
  Contact area             : 0.000115663
  Distance to Corner       : -0.0154511
  Effective Speed Factor   : 2.659
  Load-Life Factor         : 14.0136
                                        8
  Expected Average Life    : 1.46549 10
****
 Contact name              : DiCi
  Max Normal Load          : 13.9609
  Max Normal Stress        : -194093.
  Displacement             : 0.0000885394
  Contact a-length         : 0.016231
  Contact b-length         : 0.00197363
  Contact area             : 0.000100638
  Distance to Corner: Dp   : 0.010019
  Distance to Corner: Ds   : 0.010019
  Effective Speed Factor   : 2.659
  Load-Life Factor         : 15.2369
                                        8
  Expected Average Life    : 2.04817 10
****
 Contact name              : DsCo
  Max Normal Load          : 21.7176
  Max Normal Stress        : -229995.
  Displacement             : 0.000124337
  Contact a-length         : 0.0192343
  Contact b-length         : 0.00233899
  Contact area             : 0.000141337
  Distance to Corner       : -0.0172846
  Effective Speed Factor   : 2.659
  Load-Life Factor         : 9.79481
                                        7
  Expected Average Life    : 3.49758 10
```

```
=========================
 Ball number          : 24
 Ball angle           : 120.
 Ball position        : {1.92842, -1.35029, 0.}
 Solution current?    : Yes
 Ball activity        : ON
 Ball request         : solve
 Cross over angle          : 37.0296
 Residual Force Vector     : {-1.12431, -0.334518, -0.375591}
                                                  -6
 Displacement Residual     : 5.98702 10
****
 Contact name              : DpCi
  Max Normal Load          : 15.2604
  Max Normal Stress        : -208454.
  Displacement             : 0.000102121
  Contact a-length         : 0.0174316
  Contact b-length         : 0.00211953
  Contact area             : 0.000116072
  Distance to Corner       : -0.0154818
  Effective Speed Factor   : 2.659
  Load-Life Factor         : 13.9393
                                        8
  Expected Average Life    : 1.43467 10
****
 Contact name              : DiCi
  Max Normal Load          : 13.9855
  Max Normal Stress        : -194124.
  Displacement             : 0.0000885673
  Contact a-length         : 0.0162336
  Contact b-length         : 0.00197394
  Contact area             : 0.000100669
  Distance to Corner: Dp   : 0.0100164
  Distance to Corner: Ds   : 0.0100164
  Effective Speed Factor   : 2.659
  Load-Life Factor         : 15.21
                                        8
  Expected Average Life    : 2.03378 10
****
 Contact name              : DsCo
  Max Normal Load          : 21.7817
  Max Normal Stress        : -230246.
  Displacement             : 0.000124609
  Contact a-length         : 0.0192553
  Contact b-length         : 0.00234155
  Contact area             : 0.000141646
  Distance to Corner       : -0.0173056
  Effective Speed Factor   : 2.659
  Load-Life Factor         : 9.76599
                                        7
  Expected Average Life    : 3.4566 10
```

```
==========================
 Ball number          : 25
 Ball angle           : 110.
 Ball position        : {2.14461, -1.00005, 0.}
 Solution current?    : Yes
 Ball activity        : ON
 Ball request         : solve
 Cross over angle          : 36.9059
 Residual Force Vector     : {-1.05674, -0.546743, -0.374005}
                                          -6
 Displacement Residual     : 6.0585 10
****
 Contact name              : DpCi
  Max Normal Load          : 15.3412
  Max Normal Stress        : -208819.
  Displacement             : 0.000102479
  Contact a-length         : 0.0174621
  Contact b-length         : 0.00212325
  Contact area             : 0.000116479
  Distance to Corner       : -0.0155124
  Effective Speed Factor   : 2.659
  Load-Life Factor         : 13.866
                                        8
  Expected Average Life    : 1.4047 10
****
 Contact name              : DiCi
  Max Normal Load          : 14.0097
  Max Normal Stress        : -194152.
  Displacement             : 0.0000885935
  Contact a-length         : 0.016236
  Contact b-length         : 0.00197423
  Contact area             : 0.000100699
  Distance to Corner: Dp   : 0.010014
  Distance to Corner: Ds   : 0.010014
  Effective Speed Factor   : 2.659
  Load-Life Factor         : 15.1838
                                        8
  Expected Average Life    : 2.01977 10
****
 Contact name              : DsCo
  Max Normal Load          : 21.8454
  Max Normal Stress        : -230496.
  Displacement             : 0.000124879
  Contact a-length         : 0.0192762
  Contact b-length         : 0.00234409
  Contact area             : 0.000141953
  Distance to Corner       : -0.0173265
  Effective Speed Factor   : 2.659
  Load-Life Factor         : 9.73752
                                        7
  Expected Average Life    : 3.41646 10
```

```
==========================
 Ball number          : 26
 Ball angle           : 100.
 Ball position        : {2.29743, -0.615594, 0.}
 Solution current?    : Yes
 Ball activity        : ON
 Ball request         : solve
 Cross over angle          : 36.7826
 Residual Force Vector     : {-0.949216, -0.744982, -0.372343}
                                          -6
 Displacement Residual     : 6.12956 10
****
 Contact name              : DpCi
  Max Normal Load          : 15.4218
  Max Normal Stress        : -209182.
  Displacement             : 0.000102836
  Contact a-length         : 0.0174924
  Contact b-length         : 0.00212693
  Contact area             : 0.000116884
  Distance to Corner       : -0.0155427
  Effective Speed Factor   : 2.659
  Load-Life Factor         : 13.7935
                                        8
  Expected Average Life    : 1.37556 10
****
 Contact name              : DiCi
  Max Normal Load          : 14.0335
  Max Normal Stress        : -194179.
  Displacement             : 0.0000886182
  Contact a-length         : 0.0162382
  Contact b-length         : 0.0019745
  Contact area             : 0.000100727
  Distance to Corner: Dp   : 0.0100118
  Distance to Corner: Ds   : 0.0100118
  Effective Speed Factor   : 2.659
  Load-Life Factor         : 15.158
                                        8
  Expected Average Life    : 2.00612 10
****
 Contact name              : DsCo
  Max Normal Load          : 21.9087
  Max Normal Stress        : -230744.
  Displacement             : 0.000125148
  Contact a-length         : 0.019297
  Contact b-length         : 0.00234661
  Contact area             : 0.000142259
  Distance to Corner       : -0.0173472
  Effective Speed Factor   : 2.659
  Load-Life Factor         : 9.70938
                                        7
  Expected Average Life    : 3.37714 10
```

```
==========================
 Ball number          : 27
 Ball angle           : 90.
 Ball position        : {2.38153, -0.208357, 0.}
 Solution current?    : Yes
 Ball activity        : ON
 Ball request         : solve
 Cross over angle          : 36.6599
 Residual Force Vector     : {-0.804667, -0.921739, -0.370607}
                                          -6
 Displacement Residual     : 6.2002 10
****
 Contact name              : DpCi
  Max Normal Load          : 15.5023
  Max Normal Stress        : -209542.
  Displacement             : 0.00010319
  Contact a-length         : 0.0175225
  Contact b-length         : 0.0021306
  Contact area             : 0.000117287
  Distance to Corner       : -0.0155728
  Effective Speed Factor   : 2.659
  Load-Life Factor         : 13.7219
                                        8
  Expected Average Life    : 1.34721 10
****
 Contact name              : DiCi
  Max Normal Load          : 14.0568
  Max Normal Stress        : -194205.
  Displacement             : 0.0000886412
  Contact a-length         : 0.0162404
  Contact b-length         : 0.00197476
  Contact area             : 0.000100753
  Distance to Corner: Dp   : 0.0100096
  Distance to Corner: Ds   : 0.0100096
  Effective Speed Factor   : 2.659
  Load-Life Factor         : 15.1328
                                        8
  Expected Average Life    : 1.99281 10
****
 Contact name              : DsCo
  Max Normal Load          : 21.9716
  Max Normal Stress        : -230990.
  Displacement             : 0.000125415
  Contact a-length         : 0.0193176
  Contact b-length         : 0.00234911
  Contact area             : 0.000142563
  Distance to Corner       : -0.0173678
  Effective Speed Factor   : 2.659
  Load-Life Factor         : 9.68158
                                        7
  Expected Average Life    : 3.33863 10
```

```
=========================
 Ball number          : 28
 Ball angle           : 80.
 Ball position        : {2.39363, 0.209416, 0.}
 Solution current?    : Yes
 Ball activity        : ON
 Ball request         : solve
 Cross over angle          : 36.5377
 Residual Force Vector     : {-0.627431, -1.07014, -0.368797}
                                                  -6
 Displacement Residual     : 6.27043 10
****
 Contact name              : DpCi
  Max Normal Load          : 15.5826
  Max Normal Stress        : -209900.
  Displacement             : 0.000103543
  Contact a-length         : 0.0175525
  Contact b-length         : 0.00213423
  Contact area             : 0.000117687
  Distance to Corner       : -0.0156027
  Effective Speed Factor   : 2.659
  Load-Life Factor         : 13.6511
                                        8
  Expected Average Life    : 1.31963 10
****
 Contact name              : DiCi
  Max Normal Load          : 14.0798
  Max Normal Stress        : -194228.
  Displacement             : 0.0000886627
  Contact a-length         : 0.0162423
  Contact b-length         : 0.001975
  Contact area             : 0.000100778
  Distance to Corner: Dp   : 0.0100077
  Distance to Corner: Ds   : 0.0100077
  Effective Speed Factor   : 2.659
  Load-Life Factor         : 15.1082
                                        8
  Expected Average Life    : 1.97985 10
****
 Contact name              : DsCo
  Max Normal Load          : 22.0342
  Max Normal Stress        : -231235.
  Displacement             : 0.000125681
  Contact a-length         : 0.019338
  Contact b-length         : 0.0023516
  Contact area             : 0.000142865
  Distance to Corner       : -0.0173883
  Effective Speed Factor   : 2.659
  Load-Life Factor         : 9.6541
                                        7
  Expected Average Life    : 3.30088 10
```

```
=========================
 Ball number          : 29
 Ball angle           : 70.
 Ball position        : {2.33264, 0.62503, 0.}
 Solution current?    : Yes
 Ball activity        : ON
 Ball request         : solve
 Cross over angle          : 36.4161
 Residual Force Vector     : {-0.423113, -1.1842, -0.366916}
                                                  -6
 Displacement Residual     : 6.34024 10
****
 Contact name              : DpCi
  Max Normal Load          : 15.6629
  Max Normal Stress        : -210255.
  Displacement             : 0.000103894
  Contact a-length         : 0.0175822
  Contact b-length         : 0.00213785
  Contact area             : 0.000118086
  Distance to Corner       : -0.0156325
  Effective Speed Factor   : 2.659
  Load-Life Factor         : 13.5812
                                        8
  Expected Average Life    : 1.2928 10
****
 Contact name              : DiCi
  Max Normal Load          : 14.1023
  Max Normal Stress        : -194250.
  Displacement             : 0.0000886827
  Contact a-length         : 0.0162442
  Contact b-length         : 0.00197522
  Contact area             : 0.000100801
  Distance to Corner: Dp   : 0.0100058
  Distance to Corner: Ds   : 0.0100058
  Effective Speed Factor   : 2.659
  Load-Life Factor         : 15.084
                                        8
  Expected Average Life    : 1.96722 10
****
 Contact name              : DsCo
  Max Normal Load          : 22.0963
  Max Normal Stress        : -231477.
  Displacement             : 0.000125945
  Contact a-length         : 0.0193583
  Contact b-length         : 0.00235407
  Contact area             : 0.000143165
  Distance to Corner       : -0.0174086
  Effective Speed Factor   : 2.659
  Load-Life Factor         : 9.62694
                                        7
  Expected Average Life    : 3.2639 10
```

```
=========================
 Ball number          : 30
 Ball angle           : 60.
 Ball position        : {2.19968, 1.02573, 0.}
 Solution current?    : Yes
 Ball activity        : ON
 Ball request         : solve
 Cross over angle          : 36.2949
 Residual Force Vector     : {-0.198402, -1.25903, -0.364966}
                                                  -6
 Displacement Residual     : 6.40963 10
****
 Contact name              : DpCi
  Max Normal Load          : 15.743
  Max Normal Stress        : -210608.
  Displacement             : 0.000104243
  Contact a-length         : 0.0176117
  Contact b-length         : 0.00214144
  Contact area             : 0.000118483
  Distance to Corner       : -0.015662
  Effective Speed Factor   : 2.659
  Load-Life Factor         : 13.5121
                                        8
  Expected Average Life    : 1.26669 10
****
 Contact name              : DiCi
  Max Normal Load          : 14.1245
  Max Normal Stress        : -194270.
  Displacement             : 0.0000887011
  Contact a-length         : 0.0162458
  Contact b-length         : 0.00197543
  Contact area             : 0.000100821
  Distance to Corner: Dp   : 0.0100042
  Distance to Corner: Ds   : 0.0100042
  Effective Speed Factor   : 2.659
  Load-Life Factor         : 15.0604
                                        8
  Expected Average Life    : 1.95492 10
****
 Contact name              : DsCo
  Max Normal Load          : 22.1581
  Max Normal Stress        : -231718.
  Displacement             : 0.000126207
  Contact a-length         : 0.0193784
  Contact b-length         : 0.00235652
  Contact area             : 0.000143463
  Distance to Corner       : -0.0174287
  Effective Speed Factor   : 2.659
  Load-Life Factor         : 9.6001
                                        7
  Expected Average Life    : 3.22765 10
```

```
=========================
 Ball number          : 31
 Ball angle           : 50.
 Ball position        : {1.99811, 1.39909, 0.}
 Solution current?    : Yes
 Ball activity        : ON
 Ball request         : solve
 Cross over angle          : 36.1743
 Residual Force Vector     : {0.0391436, -1.29105, -0.362947}
                                          -6
 Displacement Residual     : 6.47861 10
****
 Contact name              : DpCi
  Max Normal Load          : 15.8229
  Max Normal Stress        : -210959.
  Displacement             : 0.00010459
  Contact a-length         : 0.017641
  Contact b-length         : 0.002145
  Contact area             : 0.000118878
  Distance to Corner       : -0.0156913
  Effective Speed Factor   : 2.659
  Load-Life Factor         : 13.4438
                                        8
  Expected Average Life    : 1.24128 10
****
 Contact name              : DiCi
  Max Normal Load          : 14.1462
  Max Normal Stress        : -194289.
  Displacement             : 0.000088718
  Contact a-length         : 0.0162474
  Contact b-length         : 0.00197562
  Contact area             : 0.000100841
  Distance to Corner: Dp   : 0.0100026
  Distance to Corner: Ds   : 0.0100026
  Effective Speed Factor   : 2.659
  Load-Life Factor         : 15.0373
                                        8
  Expected Average Life    : 1.94294 10
****
 Contact name              : DsCo
  Max Normal Load          : 22.2195
  Max Normal Stress        : -231957.
  Displacement             : 0.000126468
  Contact a-length         : 0.0193984
  Contact b-length         : 0.00235895
  Contact area             : 0.000143759
  Distance to Corner       : -0.0174487
  Effective Speed Factor   : 2.659
  Load-Life Factor         : 9.57357
                                        7
  Expected Average Life    : 3.19212 10
```

```
=========================
 Ball number          : 32
 Ball angle           : 40.
 Ball position        : {1.73339, 1.73339, 0.}
 Solution current?    : Yes
 Ball activity        : ON
 Ball request         : solve
 Cross over angle          : 36.0542
 Residual Force Vector     : {0.281356, -1.27816, -0.360862}
                                          -6
 Displacement Residual     : 6.54717 10
****
 Contact name              : DpCi
  Max Normal Load          : 15.9027
  Max Normal Stress        : -211307.
  Displacement             : 0.000104936
  Contact a-length         : 0.0176701
  Contact b-length         : 0.00214854
  Contact area             : 0.000119271
  Distance to Corner       : -0.0157204
  Effective Speed Factor   : 2.659
  Load-Life Factor         : 13.3763
                                        8
  Expected Average Life    : 1.21655 10
****
 Contact name              : DiCi
  Max Normal Load          : 14.1675
  Max Normal Stress        : -194306.
  Displacement             : 0.0000887334
  Contact a-length         : 0.0162488
  Contact b-length         : 0.00197579
  Contact area             : 0.000100858
  Distance to Corner: Dp   : 0.0100012
  Distance to Corner: Ds   : 0.0100012
  Effective Speed Factor   : 2.659
  Load-Life Factor         : 15.0146
                                        8
  Expected Average Life    : 1.93127 10
****
 Contact name              : DsCo
  Max Normal Load          : 22.2805
  Max Normal Stress        : -232195.
  Displacement             : 0.000126727
  Contact a-length         : 0.0194183
  Contact b-length         : 0.00236137
  Contact area             : 0.000144054
  Distance to Corner       : -0.0174686
  Effective Speed Factor   : 2.659
  Load-Life Factor         : 9.54734
                                        7
  Expected Average Life    : 3.15729 10
```

```
=========================
 Ball number          : 33
 Ball angle           : 30.
 Ball position        : {1.41303, 2.01802, 0.}
 Solution current?    : Yes
 Ball activity        : ON
 Ball request         : solve
 Cross over angle          : 35.9346
 Residual Force Vector     : {0.519737, -1.21979, -0.358712}
                                          -6
 Displacement Residual     : 6.61532 10
****
 Contact name              : DpCi
  Max Normal Load          : 15.9824
  Max Normal Stress        : -211653.
  Displacement             : 0.00010528
  Contact a-length         : 0.0176991
  Contact b-length         : 0.00215206
  Contact area             : 0.000119661
  Distance to Corner       : -0.0157493
  Effective Speed Factor   : 2.659
  Load-Life Factor         : 13.3096
                                        8
  Expected Average Life    : 1.19247 10
****
 Contact name              : DiCi
  Max Normal Load          : 14.1884
  Max Normal Stress        : -194321.
  Displacement             : 0.0000887474
  Contact a-length         : 0.0162501
  Contact b-length         : 0.00197594
  Contact area             : 0.000100874
  Distance to Corner: Dp   : 0.00999993
  Distance to Corner: Ds   : 0.00999993
  Effective Speed Factor   : 2.659
  Load-Life Factor         : 14.9925
                                        8
  Expected Average Life    : 1.9199 10
****
 Contact name              : DsCo
  Max Normal Load          : 22.3412
  Max Normal Stress        : -232431.
  Displacement             : 0.000126984
  Contact a-length         : 0.019438
  Contact b-length         : 0.00236376
  Contact area             : 0.000144346
  Distance to Corner       : -0.0174883
  Effective Speed Factor   : 2.659
  Load-Life Factor         : 9.52142
                                        7
  Expected Average Life    : 3.12313 10
```

```
=========================
 Ball number          : 34
 Ball angle           : 20.
 Ball position        : {1.04627, 2.24374, 0.}
 Solution current?    : Yes
 Ball activity        : ON
 Ball request         : solve
 Cross over angle          : 35.8155
 Residual Force Vector     : {0.745756, -1.117, -0.356499}
                                      -6
 Displacement Residual     : 6.68306 10
****
 Contact name              : DpCi
  Max Normal Load          : 16.0619
  Max Normal Stress        : -211997.
  Displacement             : 0.000105622
  Contact a-length         : 0.0177278
  Contact b-length         : 0.00215555
  Contact area             : 0.00012005
  Distance to Corner       : -0.0157781
  Effective Speed Factor   : 2.659
  Load-Life Factor         : 13.2437
                                    8
  Expected Average Life    : 1.16903 10
****
 Contact name              : DiCi
  Max Normal Load          : 14.209
  Max Normal Stress        : -194334.
  Displacement             : 0.0000887599
  Contact a-length         : 0.0162512
  Contact b-length         : 0.00197608
  Contact area             : 0.000100888
  Distance to Corner: Dp   : 0.00999878
  Distance to Corner: Ds   : 0.00999878
  Effective Speed Factor   : 2.659
  Load-Life Factor         : 14.9708
                                    8
  Expected Average Life    : 1.90884 10
****
 Contact name              : DsCo
  Max Normal Load          : 22.4015
  Max Normal Stress        : -232665.
  Displacement             : 0.00012724
  Contact a-length         : 0.0194576
  Contact b-length         : 0.00236614
  Contact area             : 0.000144637
  Distance to Corner       : -0.0175079
  Effective Speed Factor   : 2.659
  Load-Life Factor         : 9.49579
                                    7
  Expected Average Life    : 3.08965 10
```

```
==========================
 Ball number          : 35
 Ball angle           : 10.
 Ball position        : {0.643902, 2.40308, 0.}
 Solution current?    : Yes
 Ball activity        : ON
 Ball request         : solve
 Cross over angle          : 35.697
 Residual Force Vector     : {0.95115, -0.972423, -0.354223}
                                          -6
 Displacement Residual     : 6.7504 10
****
 Contact name              : DpCi
  Max Normal Load          : 16.1413
  Max Normal Stress        : -212338.
  Displacement             : 0.000105962
  Contact a-length         : 0.0177563
  Contact b-length         : 0.00215902
  Contact area             : 0.000120437
  Distance to Corner       : -0.0158066
  Effective Speed Factor   : 2.659
  Load-Life Factor         : 13.1786
                                        8
  Expected Average Life    : 1.14621 10
****
 Contact name              : DiCi
  Max Normal Load          : 14.2291
  Max Normal Stress        : -194347.
  Displacement             : 0.0000887709
  Contact a-length         : 0.0162522
  Contact b-length         : 0.0019762
  Contact area             : 0.000100901
  Distance to Corner: Dp   : 0.00999777
  Distance to Corner: Ds   : 0.00999777
  Effective Speed Factor   : 2.659
  Load-Life Factor         : 14.9497
                                        8
  Expected Average Life    : 1.89806 10
****
 Contact name              : DsCo
  Max Normal Load          : 22.4614
  Max Normal Stress        : -232897.
  Displacement             : 0.000127495
  Contact a-length         : 0.019477
  Contact b-length         : 0.00236851
  Contact area             : 0.000144926
  Distance to Corner       : -0.0175273
  Effective Speed Factor   : 2.659
  Load-Life Factor         : 9.47046
                                        7
  Expected Average Life    : 3.0568 10
```

```
=========================
 Ball number          : 36
 Ball angle           : 0.
 Ball position        : {0.217889, 2.49049, 0.}
 Solution current?    : Yes
 Ball activity        : ON
 Ball request         : solve
 Cross over angle          : 44.2689
 Residual Force Vector     : {0.083662, 0.476141, -0.247504}
                                          -6
 Displacement Residual     : 1.84667 10
****
 Contact name              : DpCo
  Max Normal Load          : 15.1041
  Max Normal Stress        : -205694.
  Displacement             : 0.000099445
  Contact a-length         : 0.0172016
  Contact b-length         : 0.00209172
  Contact area             : 0.000113037
  Distance to Corner       : -0.0152519
  Effective Speed Factor   : 2.659
  Load-Life Factor         : 14.0836
                                       8
  Expected Average Life    : 1.495 10
****
 Contact name              : DiCi
  Max Normal Load          : 14.3819
  Max Normal Stress        : -199774.
  Displacement             : 0.0000937981
  Contact a-length         : 0.0167061
  Contact b-length         : 0.00203139
  Contact area             : 0.000106615
  Distance to Corner: Dp   : 0.00954392
  Distance to Corner: Ds   : 0.00954392
  Effective Speed Factor   : 2.659
  Load-Life Factor         : 14.7908
                                       8
  Expected Average Life    : 1.81866 10
****
 Contact name              : DsCi
  Max Normal Load          : 20.6104
  Max Normal Stress        : -225522.
  Displacement             : 0.000119522
  Contact a-length         : 0.0188583
  Contact b-length         : 0.00229292
  Contact area             : 0.000135844
  Distance to Corner       : -0.0169086
  Effective Speed Factor   : 2.659
  Load-Life Factor         : 10.321
                                       7
  Expected Average Life    : 4.31196 10
```

```
=========================
Summary of Performance
=========================

 Applied Angular Twist (degrees) : 0.319435

 Total Internal Loads (Fx,Fy,Fz)
 Primary Disk                    : {-299.373, 52.9867, -252.672}
 Intermediate Disk               : {4.28087, -1.85111, -22.7731}
 Secondary Disk                  : {307.704, -41.8446, 286.253}

 Total Axial Torque (Tz)
 Primary Disk                    : 30.8403
 Intermediate Disk               : 1207.89
 Secondary Disk                  : -1199.6

 Torque Ratio: Ds/Dp             : 38.8973
 Torque Ratio: Di/Dp             : 39.1659
 Torque Ratio: Di/Ds             : 1.00691

 Tosional Stiffness (T/rad)      : 215168.

 Average Residual Force          : {-0.350337, -0.258083, -0.300212}
                                          -6
 Average Displacement Residual   : 3.82939 10

 Dp Speed                        : 10.
 Ds Speed                        : 0.27027
 Speed Conversion Ratio          : 37.
 Effective N.D. Speed            : 20.
 Minimum Expected Average Life
                                            8
                          hours  : 1.14621 10
                          years  : 13084.6

  Average Load-Life Factor: Dp   : 14.2082
  Average Load-Life Factor: Di   : 15.0849
  Average Load-Life Factor: Ds   : 10.1408
```

```
=========================
Summary of Extreme Values
=========================

 Maximum Compressive Contact Stress Dp : -212338.
 At ball number                        : 35
 Maximum Compressive Contact Stress Di : -199774.
 At ball number                        : 36
 Maximum Compressive Contact Stress Ds : -225522.
 At ball number                        : 36

 Maximum Ball Deflection Dp            : 0.000105962
 At ball number                        : 35
 Maximum Ball Deflection Di            : 0.0000937981
 At ball number                        : 36
 Maximum Ball Deflection Ds            : 0.000127495
 At ball number                        : 35

 Maximum Ball Contact Area Dp          : 0.000120437
 At ball number                        : 35
 Maximum Ball Contact Area Di          : 0.000106615
 At ball number                        : 36
 Maximum Ball Contact Area Ds          : 0.000144926
 At ball number                        : 35

 Maximum Ball a-patch Dp               : 0.0177563
 At ball number                        : 35
 Maximum Ball a-patch Di               : 0.0167061
 At ball number                        : 36
 Maximum Ball a-patch Ds               : 0.019477
 At ball number                        : 35

 Maximum Ball b-patch Dp               : 0.00215902
 At ball number                        : 35
 Maximum Ball b-patch Di               : 0.00203139
 At ball number                        : 36
 Maximum Ball b-patch Ds               : 0.00236851
 At ball number                        : 35

 Minimum Distance to Dp Corner         : -0.0158066
 At ball number                        : 35
 Minimum Distance to Di Corner: Dp     : 0.00954392
 At ball number                        : 36
 Minimum Distance to Di Corner: Ds     : 0.00954392
 At ball number                        : 36
 Minimum Distance to Ds Corner         : -0.0175273
 At ball number                        : 35

=========================
=========================
```

SYNKdrive^{tm} Speed Conversion Technology

Analytical and Numerical Results

Precision Speed Reducer for Robotics and Manufacturing
(TRP-93-009)

Conforming Race Design
Conforming Percentage: 52%
Flank Angle: 30 degrees
Applied Torque: 1200 in-lbs

1.0 Geometric Definition

```
Summary of Conforming Race Parameters
-------------------------------------
BallDiameter                    = 0.15625

ConformingDiameter              = 0.1625
ConformingPercentage            = 52.

PrimaryFlankAngleDegrees        = 30.
IntermediateFlankAngleDegrees   = 0.
SecondaryFlankAngleDegrees      = 30.

PrimaryFractionBallDepth        = 0.3
SecondaryFractionBallDepth      = 0.3

ToleranceFraction               = 0.01

ContactToCornerDistance for Dp = 0.0090211
ContactToCornerDistance for Ds = 0.0090211
```

Summary of Primary Disk Parameters

PrimaryDiskThickness	= 0.5
PrimaryDiskDiameter	= 6.
PrimaryRadiusMax	= 2.5
PrimaryRadiusMin	= 2.28125
PrimaryDisplacement	= 0.21875
PrimaryPhiIncrement	= 180.
PrimaryNumberLobes	= 1

Summary of Intermediate Disk Parameters

IntermediateDiskThickness	= 0.0525
IntermediateDiskDiameter	= 6.
IntermediateRadiusMax	= 2.5
IntermediateRadiusMin	= 2.28125
IntermediateDisplacement	= 0.21875
IntermediateSlotWidth	= 0.15625
IntermediateTotalSlots	= 36
IntermediateGammaIncrement	= 10.

Summary of Secondary Disk Parameters

SecondaryDiskThickness	= 0.5
SecondaryDiskDiameter	= 6.
SecondaryRadiusMax	= 2.5
SecondaryRadiusMin	= 2.28125
SecondaryDisplacement	= 0.21875
SecondaryPhiIncrement	= 4.86486
SecondaryNumberLobes	= 37

2.0 Ball Race Section Profile

Primary and Secondary Race Profiles

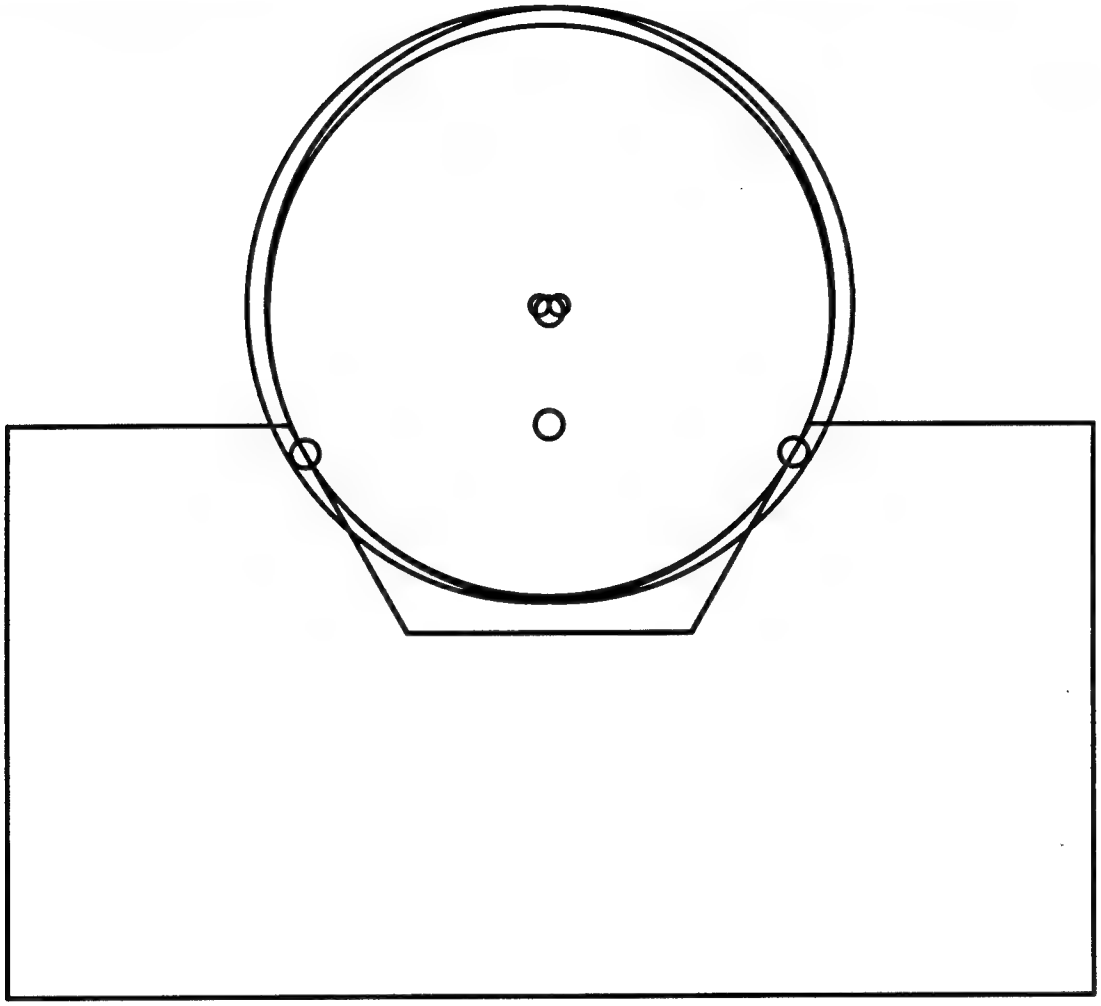

3.0 Constraints and Kinematic Results

```
Summary of Drive Constraint Parameters
--------------------------------------
PrimaryNumberLobes              = 1
SecondaryNumberLobes            = 37
IntermediateTotalSlots          = 36 (requested balls)

BallConjugateDirection          = forward drive
BallConstraintCondition         = exactly constrained

Conjugate constraints           = 36
Forward drive condition         = 36
Reverser drive condition        = 38
Predicted speed ratio           = 37 to 1


Summary of Kinematic Solver Results
-----------------------------------
PrimaryAngleStart               = 0.
PrimaryAngleFinish              = 5.
PrimaryAngleDelta               = 1.
PrimaryAngleNumber              = 6.
Speed Conversion Ratio (Dp:Ds) = 37. to 1

PrimaryDiskDeltaAngle:
   Step          Dp Angle          Ds Angle
   ----          --------          --------
                                          -17
    1              0.              2.77556 10
    2              1.              0.027027
    3              2.              0.0540541
    4              3.              0.0810811
    5              4.              0.108108
    6              5.              0.135135
```

4.0 Numerical Results

```
================================================
Summary of Stress and Displacement Calculations
================================================
 Calculated for kinematic solution : 6
 Angular Deformation               : 0.337675
 Applied Torque                    : 1199.6
```

```
==========================
 Ball number          : 1
 Ball angle           : 350.
 Ball position        : {-0.21683, 2.47838, 0.}
 Solution current?    : Yes
 Ball activity        : ON
 Ball request         : solve
 Cross over angle          : 42.3158
 Residual Force Vector     : {0.175374, 0.434707, -0.245101}
                                                  -6
 Displacement Residual     : 2.01273 10
****
 Contact name              : DpCo
  Max Normal Load          : 16.3162
  Max Normal Stress        : -210880.
  Displacement             : 0.000104522
  Contact a-length         : 0.0176352
  Contact b-length         : 0.00214445
  Contact area             : 0.000118808
  Distance to Corner       : -0.00861415
  Effective Speed Factor   : 2.659
  Load-Life Factor         : 13.0373
                                       8
  Expected Average Life    : 1.09784 10
****
 Contact name              : DiCi
  Max Normal Load          : 14.5965
  Max Normal Stress        : -200267.
  Displacement             : 0.0000942616
  Contact a-length         : 0.0167473
  Contact b-length         : 0.0020364
  Contact area             : 0.000107142
  Distance to Corner: Dp   : 0.00950269
  Distance to Corner: Ds   : 0.00950269
  Effective Speed Factor   : 2.659
  Load-Life Factor         : 14.5733
                                       8
  Expected Average Life    : 1.71404 10
****
 Contact name              : DsCi
  Max Normal Load          : 21.4959
  Max Normal Stress        : -229029.
  Displacement             : 0.000123268
  Contact a-length         : 0.0191515
  Contact b-length         : 0.00232857
  Contact area             : 0.000140101
  Distance to Corner       : -0.0101304
  Effective Speed Factor   : 2.659
  Load-Life Factor         : 9.89586
                                       7
  Expected Average Life    : 3.64417 10
```

```
=========================
 Ball number          : 2
 Ball angle           : 340.
 Ball position        : {-0.640757, 2.39134, 0.}
 Solution current?    : Yes
 Ball activity        : ON
 Ball request         : solve
 Cross over angle         : 42.4275
 Residual Force Vector    : {0.0859235, 0.451453, -0.244184}
                                        -6
 Displacement Residual    : 1.97067 10
****
 Contact name             : DpCo
  Max Normal Load         : 16.2494
  Max Normal Stress       : -210577.
  Displacement            : 0.000104222
  Contact a-length        : 0.0176099
  Contact b-length        : 0.00214137
  Contact area            : 0.000118467
  Distance to Corner      : -0.0085888
  Effective Speed Factor  : 2.659
  Load-Life Factor        : 13.0909
                                   8
  Expected Average Life   : 1.116 10
****
 Contact name             : DiCi
  Max Normal Load         : 14.5768
  Max Normal Stress       : -200224.
  Displacement            : 0.0000942214
  Contact a-length        : 0.0167437
  Contact b-length        : 0.00203597
  Contact area            : 0.000107096
  Distance to Corner: Dp  : 0.00950626
  Distance to Corner: Ds  : 0.00950626
  Effective Speed Factor  : 2.659
  Load-Life Factor        : 14.5931
                                     8
  Expected Average Life   : 1.72335 10
****
 Contact name             : DsCi
  Max Normal Load         : 21.4407
  Max Normal Stress       : -228821.
  Displacement            : 0.000123044
  Contact a-length        : 0.0191341
  Contact b-length        : 0.00232645
  Contact area            : 0.000139847
  Distance to Corner      : -0.010113
  Effective Speed Factor  : 2.659
  Load-Life Factor        : 9.92133
                                     7
  Expected Average Life   : 3.68183 10
```

```
=========================
 Ball number          : 3
 Ball angle           : 330.
 Ball position        : {-1.04114, 2.23273, 0.}
 Solution current?    : Yes
 Ball activity        : ON
 Ball request         : solve
 Cross over angle          : 42.5397
 Residual Force Vector     : {-0.00357476, 0.450478, -0.243196}
                                          -6
 Displacement Residual     : 1.92866 10
****
 Contact name              : DpCo
  Max Normal Load          : 16.1825
  Max Normal Stress        : -210272.
  Displacement             : 0.00010392
  Contact a-length         : 0.0175844
  Contact b-length         : 0.00213826
  Contact area             : 0.000118124
  Distance to Corner       : -0.00856329
  Effective Speed Factor   : 2.659
  Load-Life Factor         : 13.1451
                                        8
  Expected Average Life    : 1.13458 10
****
 Contact name              : DiCi
  Max Normal Load          : 14.5568
  Max Normal Stress        : -200180.
  Displacement             : 0.00009418
  Contact a-length         : 0.0167401
  Contact b-length         : 0.00203552
  Contact area             : 0.000107049
  Distance to Corner: Dp   : 0.00950994
  Distance to Corner: Ds   : 0.00950994
  Effective Speed Factor   : 2.659
  Load-Life Factor         : 14.6131
                                        8
  Expected Average Life    : 1.73284 10
****
 Contact name              : DsCi
  Max Normal Load          : 21.3852
  Max Normal Stress        : -228611.
  Displacement             : 0.000122819
  Contact a-length         : 0.0191166
  Contact b-length         : 0.00232432
  Contact area             : 0.000139591
  Distance to Corner       : -0.0100955
  Effective Speed Factor   : 2.659
  Load-Life Factor         : 9.94708
                                        7
  Expected Average Life    : 3.7202 10
```

```
==========================
 Ball number          : 4
 Ball angle           : 320.
 Ball position        : {-1.40606, 2.00806, 0.}
 Solution current?    : Yes
 Ball activity        : ON
 Ball request         : solve
 Cross over angle          : 42.6523
 Residual Force Vector     : {-0.0897156, 0.432353, -0.242136}
                                          -6
 Displacement Residual     : 1.8867 10
****
 Contact name              : DpCo
  Max Normal Load          : 16.1154
  Max Normal Stress        : -209965.
  Displacement             : 0.000103617
  Contact a-length         : 0.0175587
  Contact b-length         : 0.00213514
  Contact area             : 0.000117779
  Distance to Corner       : -0.00853762
  Effective Speed Factor   : 2.659
  Load-Life Factor         : 13.1998
                                        8
  Expected Average Life    : 1.1536 10
****
 Contact name              : DiCi
  Max Normal Load          : 14.5365
  Max Normal Stress        : -200135.
  Displacement             : 0.0000941374
  Contact a-length         : 0.0167363
  Contact b-length         : 0.00203506
  Contact area             : 0.000107001
  Distance to Corner: Dp   : 0.00951373
  Distance to Corner: Ds   : 0.00951373
  Effective Speed Factor   : 2.659
  Load-Life Factor         : 14.6335
                                        8
  Expected Average Life    : 1.74252 10
****
 Contact name              : DsCi
  Max Normal Load          : 21.3293
  Max Normal Stress        : -228401.
  Displacement             : 0.000122593
  Contact a-length         : 0.019099
  Contact b-length         : 0.00232218
  Contact area             : 0.000139334
  Distance to Corner       : -0.0100779
  Effective Speed Factor   : 2.659
  Load-Life Factor         : 9.97312
                                        7
  Expected Average Life    : 3.75931 10
```

```
=========================
 Ball number          : 5
 Ball angle           : 310.
 Ball position        : {-1.7248, 1.7248, 0.}
 Solution current?    : Yes
 Ball activity        : ON
 Ball request         : solve
 Cross over angle          : 42.7654
 Residual Force Vector     : {-0.169307, 0.398284, -0.241003}
                                          -6
 Displacement Residual     : 1.84481 10
****
 Contact name              : DpCo
  Max Normal Load          : 16.0481
  Max Normal Stress        : -209656.
  Displacement             : 0.000103312
  Contact a-length         : 0.0175329
  Contact b-length         : 0.002132
  Contact area             : 0.000117433
  Distance to Corner       : -0.00851178
  Effective Speed Factor   : 2.659
  Load-Life Factor         : 13.2551
                                        8
  Expected Average Life    : 1.17306 10
****
 Contact name              : DiCi
  Max Normal Load          : 14.516
  Max Normal Stress        : -200088.
  Displacement             : 0.0000940936
  Contact a-length         : 0.0167324
  Contact b-length         : 0.00203459
  Contact area             : 0.000106951
  Distance to Corner: Dp   : 0.00951763
  Distance to Corner: Ds   : 0.00951763
  Effective Speed Factor   : 2.659
  Load-Life Factor         : 14.6542
                                        8
  Expected Average Life    : 1.75239 10
****
 Contact name              : DsCi
  Max Normal Load          : 21.2732
  Max Normal Stress        : -228188.
  Displacement             : 0.000122365
  Contact a-length         : 0.0190813
  Contact b-length         : 0.00232002
  Contact area             : 0.000139075
  Distance to Corner       : -0.0100602
  Effective Speed Factor   : 2.659
  Load-Life Factor         : 9.99946
                                        7
  Expected Average Life    : 3.79918 10
```

```
=========================
 Ball number          : 6
 Ball angle           : 300.
 Ball position        : {-1.98815, 1.39212, 0.}
 Solution current?    : Yes
 Ball activity        : ON
 Ball request         : solve
 Cross over angle         : 42.879
 Residual Force Vector    : {-0.239484, 0.350056, -0.239796}
                                          -6
 Displacement Residual    : 1.80298 10
****
 Contact name             : DpCo
  Max Normal Load         : 15.9807
  Max Normal Stress       : -209345.
  Displacement            : 0.000103006
  Contact a-length        : 0.0175069
  Contact b-length        : 0.00212884
  Contact area            : 0.000117085
  Distance to Corner      : -0.00848579
  Effective Speed Factor  : 2.659
  Load-Life Factor        : 13.3111
                                        8
  Expected Average Life   : 1.19298 10
****
 Contact name             : DiCi
  Max Normal Load         : 14.4952
  Max Normal Stress       : -200040.
  Displacement            : 0.0000940484
  Contact a-length        : 0.0167284
  Contact b-length        : 0.0020341
  Contact area            : 0.000106899
  Distance to Corner: Dp  : 0.00952164
  Distance to Corner: Ds  : 0.00952164
  Effective Speed Factor  : 2.659
  Load-Life Factor        : 14.6752
                                        8
  Expected Average Life   : 1.76245 10
****
 Contact name             : DsCi
  Max Normal Load         : 21.2167
  Max Normal Stress       : -227975.
  Displacement            : 0.000122136
  Contact a-length        : 0.0190634
  Contact b-length        : 0.00231785
  Contact area            : 0.000138815
  Distance to Corner      : -0.0100423
  Effective Speed Factor  : 2.659
  Load-Life Factor        : 10.0261
                                        7
  Expected Average Life   : 3.83981 10
```

```
=========================
 Ball number          : 7
 Ball angle           : 290.
 Ball position        : {-2.18867, 1.02059, 0.}
 Solution current?    : Yes
 Ball activity        : ON
 Ball request         : solve
 Cross over angle          : 42.9931
 Residual Force Vector     : {-0.297817, 0.289953, -0.238514}
                                                  -6
 Displacement Residual     : 1.76124 10
****
 Contact name              : DpCo
  Max Normal Load          : 15.9131
  Max Normal Stress        : -209032.
  Displacement             : 0.000102699
  Contact a-length         : 0.0174807
  Contact b-length         : 0.00212566
  Contact area             : 0.000116735
  Distance to Corner       : -0.00845963
  Effective Speed Factor   : 2.659
  Load-Life Factor         : 13.3676
                                        8
  Expected Average Life    : 1.21337 10
****
 Contact name              : DiCi
  Max Normal Load          : 14.4742
  Max Normal Stress        : -199991.
  Displacement             : 0.0000940021
  Contact a-length         : 0.0167242
  Contact b-length         : 0.0020336
  Contact area             : 0.000106847
  Distance to Corner: Dp   : 0.00952576
  Distance to Corner: Ds   : 0.00952576
  Effective Speed Factor   : 2.659
  Load-Life Factor         : 14.6965
                                        8
  Expected Average Life    : 1.77272 10
****
 Contact name              : DsCi
  Max Normal Load          : 21.1598
  Max Normal Stress        : -227760.
  Displacement             : 0.000121906
  Contact a-length         : 0.0190454
  Contact b-length         : 0.00231567
  Contact area             : 0.000138553
  Distance to Corner       : -0.0100243
  Effective Speed Factor   : 2.659
  Load-Life Factor         : 10.053
                                        7
  Expected Average Life    : 3.88123 10
```

```
==========================
 Ball number          : 8
 Ball angle           : 280.
 Ball position        : {-2.32091, 0.621885, 0.}
 Solution current?    : Yes
 Ball activity        : ON
 Ball request         : solve
 Cross over angle          : 43.1077
 Residual Force Vector     : {-0.342387, 0.22066, -0.237156}
                                                  -6
 Displacement Residual     : 1.71959 10
****
 Contact name              : DpCo
  Max Normal Load          : 15.8454
  Max Normal Stress        : -208718.
  Displacement             : 0.00010239
  Contact a-length         : 0.0174544
  Contact b-length         : 0.00212246
  Contact area             : 0.000116384
  Distance to Corner       : -0.00843331
  Effective Speed Factor   : 2.659
  Load-Life Factor         : 13.4247
                                        8
  Expected Average Life    : 1.23424 10
****
 Contact name              : DiCi
  Max Normal Load          : 14.4529
  Max Normal Stress        : -199940.
  Displacement             : 0.0000939544
  Contact a-length         : 0.01672
  Contact b-length         : 0.00203308
  Contact area             : 0.000106793
  Distance to Corner: Dp   : 0.00953
  Distance to Corner: Ds   : 0.00953
  Effective Speed Factor   : 2.659
  Load-Life Factor         : 14.7182
                                        8
  Expected Average Life    : 1.78319 10
****
 Contact name              : DsCi
  Max Normal Load          : 21.1026
  Max Normal Stress        : -227543.
  Displacement             : 0.000121674
  Contact a-length         : 0.0190273
  Contact b-length         : 0.00231347
  Contact area             : 0.00013829
  Distance to Corner       : -0.0100062
  Effective Speed Factor   : 2.659
  Load-Life Factor         : 10.0803
                                        7
  Expected Average Life    : 3.92346 10
```

```
==========================
 Ball number          : 9
 Ball angle           : 270.
 Ball position        : {-2.38153, 0.208357, 0.}
 Solution current?    : Yes
 Ball activity        : ON
 Ball request         : solve
 Cross over angle          : 43.2227
 Residual Force Vector     : {-0.371857, 0.145154, -0.235722}
                                                  -6
 Displacement Residual     : 1.67804 10
****
 Contact name              : DpCo
  Max Normal Load          : 15.7776
  Max Normal Stress        : -208401.
  Displacement             : 0.000102079
  Contact a-length         : 0.0174279
  Contact b-length         : 0.00211923
  Contact area             : 0.000116031
  Distance to Corner       : -0.00840682
  Effective Speed Factor   : 2.659
  Load-Life Factor         : 13.4824
                                        8
  Expected Average Life    : 1.25562 10
****
 Contact name              : DiCi
  Max Normal Load          : 14.4313
  Max Normal Stress        : -199888.
  Displacement             : 0.0000939055
  Contact a-length         : 0.0167156
  Contact b-length         : 0.00203255
  Contact area             : 0.000106737
  Distance to Corner: Dp   : 0.00953436
  Distance to Corner: Ds   : 0.00953436
  Effective Speed Factor   : 2.659
  Load-Life Factor         : 14.7402
                                        8
  Expected Average Life    : 1.79387 10
****
 Contact name              : DsCi
  Max Normal Load          : 21.0451
  Max Normal Stress        : -227326.
  Displacement             : 0.000121442
  Contact a-length         : 0.0190091
  Contact b-length         : 0.00231126
  Contact area             : 0.000138026
  Distance to Corner       : -0.00998802
  Effective Speed Factor   : 2.659
  Load-Life Factor         : 10.1078
                                        7
  Expected Average Life    : 3.96653 10
```

```
=========================
 Ball number          : 10
 Ball angle           : 260.
 Ball position        : {-2.36942, -0.207298, 0.}
 Solution current?    : Yes
 Ball activity        : ON
 Ball request         : solve
 Cross over angle          : 43.3383
 Residual Force Vector     : {-0.385505, 0.0665829, -0.234209}
                                                  -6
 Displacement Residual     : 1.63661 10
****
 Contact name              : DpCo
  Max Normal Load          : 15.7095
  Max Normal Stress        : -208082.
  Displacement             : 0.000101767
  Contact a-length         : 0.0174013
  Contact b-length         : 0.00211599
  Contact area             : 0.000115676
  Distance to Corner       : -0.00838016
  Effective Speed Factor   : 2.659
  Load-Life Factor         : 13.5408
                                       8
  Expected Average Life    : 1.2775 10
****
 Contact name              : DiCi
  Max Normal Load          : 14.4095
  Max Normal Stress        : -199835.
  Displacement             : 0.0000938552
  Contact a-length         : 0.0167112
  Contact b-length         : 0.00203201
  Contact area             : 0.00010668
  Distance to Corner: Dp   : 0.00953883
  Distance to Corner: Ds   : 0.00953883
  Effective Speed Factor   : 2.659
  Load-Life Factor         : 14.7625
                                       8
  Expected Average Life    : 1.80476 10
****
 Contact name              : DsCi
  Max Normal Load          : 20.9873
  Max Normal Stress        : -227107.
  Displacement             : 0.000121208
  Contact a-length         : 0.0189908
  Contact b-length         : 0.00230903
  Contact area             : 0.00013776
  Distance to Corner       : -0.00996969
  Effective Speed Factor   : 2.659
  Load-Life Factor         : 10.1357
                                       7
  Expected Average Life    : 4.01044 10
```

```
==========================
 Ball number          : 11
 Ball angle           : 250.
 Ball position        : {-2.28569, -0.612449, 0.}
 Solution current?    : Yes
 Ball activity        : ON
 Ball request         : solve
 Cross over angle          : 43.4543
 Residual Force Vector     : {-0.383248, -0.0118608, -0.232617}
                                                  -6
 Displacement Residual     : 1.59532 10
****
 Contact name              : DpCo
  Max Normal Load          : 15.6414
  Max Normal Stress        : -207761.
  Displacement             : 0.000101454
  Contact a-length         : 0.0173744
  Contact b-length         : 0.00211273
  Contact area             : 0.00011532
  Distance to Corner       : -0.00835334
  Effective Speed Factor   : 2.659
  Load-Life Factor         : 13.5998
                                        8
  Expected Average Life    : 1.29992 10
****
 Contact name              : DiCi
  Max Normal Load          : 14.3874
  Max Normal Stress        : -199780.
  Displacement             : 0.0000938037
  Contact a-length         : 0.0167066
  Contact b-length         : 0.00203145
  Contact area             : 0.000106621
  Distance to Corner: Dp   : 0.00954342
  Distance to Corner: Ds   : 0.00954342
  Effective Speed Factor   : 2.659
  Load-Life Factor         : 14.7851
                                        8
  Expected Average Life    : 1.81588 10
****
 Contact name              : DsCi
  Max Normal Load          : 20.9291
  Max Normal Stress        : -226886.
  Displacement             : 0.000120972
  Contact a-length         : 0.0189723
  Contact b-length         : 0.00230678
  Contact area             : 0.000137492
  Distance to Corner       : -0.00995125
  Effective Speed Factor   : 2.659
  Load-Life Factor         : 10.1638
                                        7
  Expected Average Life    : 4.05523 10
```

```
=========================
 Ball number          : 12
 Ball angle           : 240.
 Ball position        : {-2.1336, -0.994914, 0.}
 Solution current?    : Yes
 Ball activity        : ON
 Ball request         : solve
 Cross over angle          : 43.5708
 Residual Force Vector     : {-0.365624, -0.0870619, -0.230946}
                                                  -6
 Displacement Residual     : 1.55418 10
****
 Contact name              : DpCo
  Max Normal Load          : 15.5731
  Max Normal Stress        : -207439.
  Displacement             : 0.000101139
  Contact a-length         : 0.0173475
  Contact b-length         : 0.00210945
  Contact area             : 0.000114962
  Distance to Corner       : -0.00832635
  Effective Speed Factor   : 2.659
  Load-Life Factor         : 13.6595
                                        8
  Expected Average Life    : 1.32287 10
****
 Contact name              : DiCi
  Max Normal Load          : 14.3651
  Max Normal Stress        : -199723.
  Displacement             : 0.0000937508
  Contact a-length         : 0.0167019
  Contact b-length         : 0.00203088
  Contact area             : 0.000106561
  Distance to Corner: Dp   : 0.00954813
  Distance to Corner: Ds   : 0.00954813
  Effective Speed Factor   : 2.659
  Load-Life Factor         : 14.8082
                                        8
  Expected Average Life    : 1.82721 10
****
 Contact name              : DsCi
  Max Normal Load          : 20.8706
  Max Normal Stress        : -226664.
  Displacement             : 0.000120735
  Contact a-length         : 0.0189538
  Contact b-length         : 0.00230453
  Contact area             : 0.000137223
  Distance to Corner       : -0.00993268
  Effective Speed Factor   : 2.659
  Load-Life Factor         : 10.1924
                                        7
  Expected Average Life    : 4.10092 10
```

```
=========================
 Ball number          : 13
 Ball angle           : 230.
 Ball position        : {-1.91847, -1.34332, 0.}
 Solution current?    : Yes
 Ball activity        : ON
 Ball request         : solve
 Cross over angle          : 43.6878
 Residual Force Vector     : {-0.333768, -0.156104, -0.229193}
                                          -6
 Displacement Residual     : 1.5132 10
****
 Contact name              : DpCo
  Max Normal Load          : 15.5046
  Max Normal Stress        : -207114.
  Displacement             : 0.000100822
  Contact a-length         : 0.0173203
  Contact b-length         : 0.00210615
  Contact area             : 0.000114602
  Distance to Corner       : -0.00829919
  Effective Speed Factor   : 2.659
  Load-Life Factor         : 13.7198
                                        8
  Expected Average Life    : 1.34639 10
****
 Contact name              : DiCi
  Max Normal Load          : 14.3424
  Max Normal Stress        : -199666.
  Displacement             : 0.0000936966
  Contact a-length         : 0.016697
  Contact b-length         : 0.00203029
  Contact area             : 0.000106499
  Distance to Corner: Dp   : 0.00955296
  Distance to Corner: Ds   : 0.00955296
  Effective Speed Factor   : 2.659
  Load-Life Factor         : 14.8315
                                        8
  Expected Average Life    : 1.83877 10
****
 Contact name              : DsCi
  Max Normal Load          : 20.8117
  Max Normal Stress        : -226440.
  Displacement             : 0.000120497
  Contact a-length         : 0.0189351
  Contact b-length         : 0.00230225
  Contact area             : 0.000136953
  Distance to Corner       : -0.00991399
  Effective Speed Factor   : 2.659
  Load-Life Factor         : 10.2212
                                        7
  Expected Average Life    : 4.14753 10
```

```
==========================
 Ball number          : 14
 Ball angle           : 220.
 Ball position        : {-1.64746, -1.64746, 0.}
 Solution current?    : Yes
 Ball activity        : ON
 Ball request         : solve
 Cross over angle          : 43.8052
 Residual Force Vector     : {-0.28935, -0.216378, -0.227358}
                                          -6
 Displacement Residual     : 1.47242 10
****
 Contact name              : DpCo
  Max Normal Load          : 15.4361
  Max Normal Stress        : -206787.
  Displacement             : 0.000100504
  Contact a-length         : 0.017293
  Contact b-length         : 0.00210282
  Contact area             : 0.000114241
  Distance to Corner       : -0.00827187
  Effective Speed Factor   : 2.659
  Load-Life Factor         : 13.7807
                                        8
  Expected Average Life    : 1.37047 10
****
 Contact name              : DiCi
  Max Normal Load          : 14.3195
  Max Normal Stress        : -199606.
  Displacement             : 0.000093641
  Contact a-length         : 0.0166921
  Contact b-length         : 0.00202969
  Contact area             : 0.000106436
  Distance to Corner: Dp   : 0.00955792
  Distance to Corner: Ds   : 0.00955792
  Effective Speed Factor   : 2.659
  Load-Life Factor         : 14.8552
                                        8
  Expected Average Life    : 1.85056 10
****
 Contact name              : DsCi
  Max Normal Load          : 20.7524
  Max Normal Stress        : -226215.
  Displacement             : 0.000120258
  Contact a-length         : 0.0189163
  Contact b-length         : 0.00229997
  Contact area             : 0.000136681
  Distance to Corner       : -0.00989518
  Effective Speed Factor   : 2.659
  Load-Life Factor         : 10.2504
                                        7
  Expected Average Life    : 4.19508 10
```

```
=========================
 Ball number          : 15
 Ball angle           : 210.
 Ball position        : {-1.32938, -1.89856, 0.}
 Solution current?    : Yes
 Ball activity        : ON
 Ball request         : solve
 Cross over angle          : 43.9232
 Residual Force Vector     : {-0.234508, -0.265681, -0.22544}
                                          -6
 Displacement Residual     : 1.43185 10
****
 Contact name              : DpCo
  Max Normal Load          : 15.3673
  Max Normal Stress        : -206458.
  Displacement             : 0.000100185
  Contact a-length         : 0.0172655
  Contact b-length         : 0.00209948
  Contact area             : 0.000113878
  Distance to Corner       : -0.00824437
  Effective Speed Factor   : 2.659
  Load-Life Factor         : 13.8423
                                        8
  Expected Average Life    : 1.39515 10
****
 Contact name              : DiCi
  Max Normal Load          : 14.2963
  Max Normal Stress        : -199546.
  Displacement             : 0.000093584
  Contact a-length         : 0.016687
  Contact b-length         : 0.00202907
  Contact area             : 0.000106372
  Distance to Corner: Dp   : 0.00956299
  Distance to Corner: Ds   : 0.00956299
  Effective Speed Factor   : 2.659
  Load-Life Factor         : 14.8793
                                        8
  Expected Average Life    : 1.86259 10
****
 Contact name              : DsCi
  Max Normal Load          : 20.6929
  Max Normal Stress        : -225989.
  Displacement             : 0.000120018
  Contact a-length         : 0.0188973
  Contact b-length         : 0.00229767
  Contact area             : 0.000136407
  Distance to Corner       : -0.00987624
  Effective Speed Factor   : 2.659
  Load-Life Factor         : 10.2799
                                        7
  Expected Average Life    : 4.2436 10
```

```
=========================
 Ball number          : 16
 Ball angle           : 200.
 Ball position        : {-0.97437, -2.08954, 0.}
 Solution current?    : Yes
 Ball activity        : ON
 Ball request         : solve
 Cross over angle         : 44.0417
 Residual Force Vector    : {-0.171747, -0.302294, -0.223439}
                                          -6
 Displacement Residual    : 1.39153 10
****
 Contact name             : DpCo
  Max Normal Load         : 15.2985
  Max Normal Stress       : -206127.
  Displacement            : 0.0000998639
  Contact a-length        : 0.0172378
  Contact b-length        : 0.00209611
  Contact area            : 0.000113513
  Distance to Corner      : -0.00821669
  Effective Speed Factor  : 2.659
  Load-Life Factor        : 13.9046
                                        8
  Expected Average Life   : 1.42044 10
****
 Contact name             : DiCi
  Max Normal Load         : 14.2729
  Max Normal Stress       : -199484.
  Displacement            : 0.0000935257
  Contact a-length        : 0.0166818
  Contact b-length        : 0.00202844
  Contact area            : 0.000106305
  Distance to Corner: Dp  : 0.00956819
  Distance to Corner: Ds  : 0.00956819
  Effective Speed Factor  : 2.659
  Load-Life Factor        : 14.9038
                                        8
  Expected Average Life   : 1.87486 10
****
 Contact name             : DsCi
  Max Normal Load         : 20.6329
  Max Normal Stress       : -225761.
  Displacement            : 0.000119776
  Contact a-length        : 0.0188783
  Contact b-length        : 0.00229535
  Contact area            : 0.000136132
  Distance to Corner      : -0.00985719
  Effective Speed Factor  : 2.659
  Load-Life Factor        : 10.3097
                                        7
  Expected Average Life   : 4.29311 10
```

```
==========================
 Ball number          : 17
 Ball angle           : 190.
 Ball position        : {-0.593576, -2.21526, 0.}
 Solution current?    : Yes
 Ball activity        : ON
 Ball request         : solve
 Cross over angle          : 44.1606
 Residual Force Vector     : {-0.103841, -0.325043, -0.221352}
                                                  -6
 Displacement Residual     : 1.35148 10
****
 Contact name              : DpCo
  Max Normal Load          : 15.2295
  Max Normal Stress        : -205795.
  Displacement             : 0.0000995416
  Contact a-length         : 0.0172099
  Contact b-length         : 0.00209273
  Contact area             : 0.000113147
  Distance to Corner       : -0.00818885
  Effective Speed Factor   : 2.659
  Load-Life Factor         : 13.9676
                                       8
  Expected Average Life    : 1.44635 10
****
 Contact name              : DiCi
  Max Normal Load          : 14.2492
  Max Normal Stress        : -199420.
  Displacement             : 0.000093466
  Contact a-length         : 0.0166765
  Contact b-length         : 0.00202779
  Contact area             : 0.000106237
  Distance to Corner: Dp   : 0.00957352
  Distance to Corner: Ds   : 0.00957352
  Effective Speed Factor   : 2.659
  Load-Life Factor         : 14.9286
                                       8
  Expected Average Life    : 1.88738 10
****
 Contact name              : DsCi
  Max Normal Load          : 20.5727
  Max Normal Stress        : -225532.
  Displacement             : 0.000119532
  Contact a-length         : 0.0188591
  Contact b-length         : 0.00229302
  Contact area             : 0.000135856
  Distance to Corner       : -0.009838
  Effective Speed Factor   : 2.659
  Load-Life Factor         : 10.3399
                                       7
  Expected Average Life    : 4.34364 10
```

```
==========================
 Ball number          : 18
 Ball angle           : 180.
 Ball position        : {-0.198824, -2.27257, 0.}
 Solution current?    : Yes
 Ball activity        : ON
 Ball request         : solve
 Cross over angle          : 36.0448
 Residual Force Vector     : {-1.21907, 0.862387, -0.477704}
                                                  -6
 Displacement Residual     : 7.50605 10
****
 Contact name              : DpCi
  Max Normal Load          : 15.9532
  Max Normal Stress        : -212020.
  Displacement             : 0.000105646
  Contact a-length         : 0.0177298
  Contact b-length         : 0.0021558
  Contact area             : 0.000120078
  Distance to Corner       : -0.00870871
  Effective Speed Factor   : 2.659
  Load-Life Factor         : 13.334
                                        8
  Expected Average Life    : 1.20122 10
****
 Contact name              : DiCi
  Max Normal Load          : 14.3094
  Max Normal Stress        : -194128.
  Displacement             : 0.000088571
  Contact a-length         : 0.0162339
  Contact b-length         : 0.00197398
  Contact area             : 0.000100674
  Distance to Corner: Dp   : 0.0100161
  Distance to Corner: Ds   : 0.0100161
  Effective Speed Factor   : 2.659
  Load-Life Factor         : 14.8657
                                        8
  Expected Average Life    : 1.8558 10
****
 Contact name              : DsCo
  Max Normal Load          : 22.3389
  Max Normal Stress        : -232442.
  Displacement             : 0.000126996
  Contact a-length         : 0.0194389
  Contact b-length         : 0.00236387
  Contact area             : 0.00014436
  Distance to Corner       : -0.0104178
  Effective Speed Factor   : 2.659
  Load-Life Factor         : 9.52239
                                        7
  Expected Average Life    : 3.12441 10
```

```
=========================
 Ball number          : 19
 Ball angle           : 170.
 Ball position        : {0.199883, -2.28468, 0.}
 Solution current?    : Yes
 Ball activity        : ON
 Ball request         : solve
 Cross over angle          : 35.9241
 Residual Force Vector     : {-1.37286, 0.630337, -0.473984}
                                                  -6
 Displacement Residual     : 7.56894 10
****
 Contact name              : DpCi
  Max Normal Load          : 16.0356
  Max Normal Stress        : -212369.
  Displacement             : 0.000105993
  Contact a-length         : 0.017759
  Contact b-length         : 0.00215935
  Contact area             : 0.000120473
  Distance to Corner       : -0.00873786
  Effective Speed Factor   : 2.659
  Load-Life Factor         : 13.2655
                                        8
  Expected Average Life    : 1.17672 10
****
 Contact name              : DiCi
  Max Normal Load          : 14.3311
  Max Normal Stress        : -194147.
  Displacement             : 0.0000885891
  Contact a-length         : 0.0162356
  Contact b-length         : 0.00197418
  Contact area             : 0.000100694
  Distance to Corner: Dp   : 0.0100144
  Distance to Corner: Ds   : 0.0100144
  Effective Speed Factor   : 2.659
  Load-Life Factor         : 14.8432
                                        8
  Expected Average Life    : 1.84457 10
****
 Contact name              : DsCo
  Max Normal Load          : 22.4005
  Max Normal Stress        : -232683.
  Displacement             : 0.00012726
  Contact a-length         : 0.0194591
  Contact b-length         : 0.00236633
  Contact area             : 0.00014466
  Distance to Corner       : -0.010438
  Effective Speed Factor   : 2.659
  Load-Life Factor         : 9.4962
                                        7
  Expected Average Life    : 3.09017 10
```

```
=========================
 Ball number          : 20
 Ball angle           : 160.
 Ball position        : {0.596722, -2.227, 0.}
 Solution current?    : Yes
 Ball activity        : ON
 Ball request         : solve
 Cross over angle          : 35.8039
 Residual Force Vector     : {-1.48228, 0.371206, -0.470205}
                                          -6
 Displacement Residual     : 7.63145 10
****
 Contact name              : DpCi
  Max Normal Load          : 16.1179
  Max Normal Stress        : -212715.
  Displacement             : 0.000106339
  Contact a-length         : 0.0177879
  Contact b-length         : 0.00216287
  Contact area             : 0.000120866
  Distance to Corner       : -0.00876682
  Effective Speed Factor   : 2.659
  Load-Life Factor         : 13.1978
                                        8
  Expected Average Life    : 1.15288 10
****
 Contact name              : DiCi
  Max Normal Load          : 14.3524
  Max Normal Stress        : -194166.
  Displacement             : 0.0000886056
  Contact a-length         : 0.0162371
  Contact b-length         : 0.00197436
  Contact area             : 0.000100713
  Distance to Corner: Dp   : 0.0100129
  Distance to Corner: Ds   : 0.0100129
  Effective Speed Factor   : 2.659
  Load-Life Factor         : 14.8212
                                        8
  Expected Average Life    : 1.83363 10
****
 Contact name              : DsCo
  Max Normal Load          : 22.4618
  Max Normal Stress        : -232923.
  Displacement             : 0.000127522
  Contact a-length         : 0.0194792
  Contact b-length         : 0.00236876
  Contact area             : 0.000144958
  Distance to Corner       : -0.0104581
  Effective Speed Factor   : 2.659
  Load-Life Factor         : 9.47029
                                        7
  Expected Average Life    : 3.05659 10
```

```
=========================
 Ball number         : 21
 Ball angle          : 150.
 Ball position       : {0.979506, -2.10056, 0.}
 Solution current?   : Yes
 Ball activity       : ON
 Ball request        : solve
 Cross over angle          : 35.6842
 Residual Force Vector     : {-1.54263, 0.0935029, -0.466371}
                                          -6
 Displacement Residual     : 7.69359 10
****
 Contact name              : DpCi
  Max Normal Load          : 16.2
  Max Normal Stress        : -213059.
  Displacement             : 0.000106684
  Contact a-length         : 0.0178167
  Contact b-length         : 0.00216636
  Contact area             : 0.000121257
  Distance to Corner       : -0.00879558
  Effective Speed Factor   : 2.659
  Load-Life Factor         : 13.1309
                                        8
  Expected Average Life    : 1.12968 10
****
 Contact name              : DiCi
  Max Normal Load          : 14.3733
  Max Normal Stress        : -194182.
  Displacement             : 0.0000886207
  Contact a-length         : 0.0162385
  Contact b-length         : 0.00197453
  Contact area             : 0.00010073
  Distance to Corner: Dp   : 0.0100115
  Distance to Corner: Ds   : 0.0100115
  Effective Speed Factor   : 2.659
  Load-Life Factor         : 14.7996
                                        8
  Expected Average Life    : 1.82299 10
****
 Contact name              : DsCo
  Max Normal Load          : 22.5228
  Max Normal Stress        : -233161.
  Displacement             : 0.000127783
  Contact a-length         : 0.0194991
  Contact b-length         : 0.00237118
  Contact area             : 0.000145254
  Distance to Corner       : -0.010478
  Effective Speed Factor   : 2.659
  Load-Life Factor         : 9.44467
                                        7
  Expected Average Life    : 3.02364 10
```

```
==========================
 Ball number          : 22
 Ball angle           : 140.
 Ball position        : {1.33635, -1.90851, 0.}
 Solution current?    : Yes
 Ball activity        : ON
 Ball request         : solve
 Cross over angle          : 35.565
 Residual Force Vector     : {-1.55085, -0.193465, -0.462481}
                                                  -6
 Displacement Residual     : 7.75535 10
****
 Contact name              : DpCi
  Max Normal Load          : 16.282
  Max Normal Stress        : -213401.
  Displacement             : 0.000107026
  Contact a-length         : 0.0178453
  Contact b-length         : 0.00216984
  Contact area             : 0.000121647
  Distance to Corner       : -0.00882417
  Effective Speed Factor   : 2.659
  Load-Life Factor         : 13.0648
                                        8
  Expected Average Life    : 1.10711 10
****
 Contact name              : DiCi
  Max Normal Load          : 14.3938
  Max Normal Stress        : -194197.
  Displacement             : 0.0000886344
  Contact a-length         : 0.0162397
  Contact b-length         : 0.00197468
  Contact area             : 0.000100746
  Distance to Corner: Dp   : 0.0100103
  Distance to Corner: Ds   : 0.0100103
  Effective Speed Factor   : 2.659
  Load-Life Factor         : 14.7786
                                        8
  Expected Average Life    : 1.81264 10
****
 Contact name              : DsCo
  Max Normal Load          : 22.5834
  Max Normal Stress        : -233397.
  Displacement             : 0.000128042
  Contact a-length         : 0.0195188
  Contact b-length         : 0.00237359
  Contact area             : 0.000145549
  Distance to Corner       : -0.0104977
  Effective Speed Factor   : 2.659
  Load-Life Factor         : 9.41932
                                        7
  Expected Average Life    : 2.99132 10
```

```
==========================
 Ball number          : 23
 Ball angle           : 130.
 Ball position        : {1.65605, -1.65605, 0.}
 Solution current?    : Yes
 Ball activity        : ON
 Ball request         : solve
 Cross over angle          : 35.4464
 Residual Force Vector     : {-1.50565, -0.479908, -0.458539}
                                                  -6
 Displacement Residual     : 7.81674 10
****
 Contact name              : DpCi
  Max Normal Load          : 16.3638
  Max Normal Stress        : -213741.
  Displacement             : 0.000107367
  Contact a-length         : 0.0178737
  Contact b-length         : 0.00217329
  Contact area             : 0.000122034
  Distance to Corner       : -0.00885256
  Effective Speed Factor   : 2.659
  Load-Life Factor         : 12.9994
                                          8
  Expected Average Life    : 1.08513 10
****
 Contact name              : DiCi
  Max Normal Load          : 14.4139
  Max Normal Stress        : -194210.
  Displacement             : 0.0000886465
  Contact a-length         : 0.0162408
  Contact b-length         : 0.00197482
  Contact area             : 0.000100759
  Distance to Corner: Dp   : 0.0100092
  Distance to Corner: Ds   : 0.0100092
  Effective Speed Factor   : 2.659
  Load-Life Factor         : 14.758
                                          8
  Expected Average Life    : 1.80257 10
****
 Contact name              : DsCo
  Max Normal Load          : 22.6436
  Max Normal Stress        : -233632.
  Displacement             : 0.0001283
  Contact a-length         : 0.0195385
  Contact b-length         : 0.00237598
  Contact area             : 0.000145842
  Distance to Corner       : -0.0105174
  Effective Speed Factor   : 2.659
  Load-Life Factor         : 9.39425
                                          7
  Expected Average Life    : 2.95959 10
```

```
==========================
 Ball number          : 24
 Ball angle           : 120.
 Ball position        : {1.92842, -1.35029, 0.}
 Solution current?    : Yes
 Ball activity        : ON
 Ball request         : solve
 Cross over angle          : 35.3282
 Residual Force Vector     : {-1.40755, -0.755886, -0.454545}
                                                  -6
 Displacement Residual     : 7.87775 10
****
 Contact name              : DpCi
  Max Normal Load          : 16.4454
  Max Normal Stress        : -214078.
  Displacement             : 0.000107706
  Contact a-length         : 0.0179019
  Contact b-length         : 0.00217672
  Contact area             : 0.00012242
  Distance to Corner       : -0.00888078
  Effective Speed Factor   : 2.659
  Load-Life Factor         : 12.9349
                                       8
  Expected Average Life    : 1.06374 10
****
 Contact name              : DiCi
  Max Normal Load          : 14.4336
  Max Normal Stress        : -194222.
  Displacement             : 0.0000886573
  Contact a-length         : 0.0162418
  Contact b-length         : 0.00197494
  Contact area             : 0.000100772
  Distance to Corner: Dp   : 0.0100082
  Distance to Corner: Ds   : 0.0100082
  Effective Speed Factor   : 2.659
  Load-Life Factor         : 14.7379
                                       8
  Expected Average Life    : 1.79277 10
****
 Contact name              : DsCo
  Max Normal Load          : 22.7036
  Max Normal Stress        : -233865.
  Displacement             : 0.000128556
  Contact a-length         : 0.0195579
  Contact b-length         : 0.00237835
  Contact area             : 0.000146133
  Distance to Corner       : -0.0105368
  Effective Speed Factor   : 2.659
  Load-Life Factor         : 9.36944
                                       7
  Expected Average Life    : 2.92846 10
```

```
=========================
 Ball number          : 25
 Ball angle           : 110.
 Ball position        : {2.14461, -1.00005, 0.}
 Solution current?    : Yes
 Ball activity        : ON
 Ball request         : solve
 Cross over angle          : 35.2105
 Residual Force Vector     : {-1.25897, -1.01165, -0.4505}
                                          -6
 Displacement Residual     : 7.93839 10
****
 Contact name              : DpCi
  Max Normal Load          : 16.5269
  Max Normal Stress        : -214413.
  Displacement             : 0.000108044
  Contact a-length         : 0.0179299
  Contact b-length         : 0.00218013
  Contact area             : 0.000122803
  Distance to Corner       : -0.0089088
  Effective Speed Factor   : 2.659
  Load-Life Factor         : 12.8711
                                        8
  Expected Average Life    : 1.04292 10
****
 Contact name              : DiCi
  Max Normal Load          : 14.4528
  Max Normal Stress        : -194232.
  Displacement             : 0.0000886666
  Contact a-length         : 0.0162427
  Contact b-length         : 0.00197504
  Contact area             : 0.000100782
  Distance to Corner: Dp   : 0.0100073
  Distance to Corner: Ds   : 0.0100073
  Effective Speed Factor   : 2.659
  Load-Life Factor         : 14.7183
                                        8
  Expected Average Life    : 1.78324 10
****
 Contact name              : DsCo
  Max Normal Load          : 22.7632
  Max Normal Stress        : -234096.
  Displacement             : 0.000128811
  Contact a-length         : 0.0195773
  Contact b-length         : 0.0023807
  Contact area             : 0.000146422
  Distance to Corner       : -0.0105562
  Effective Speed Factor   : 2.659
  Load-Life Factor         : 9.3449
                                        7
  Expected Average Life    : 2.8979 10
```

```
=========================
 Ball number          : 26
 Ball angle           : 100.
 Ball position        : {2.29743, -0.615594, 0.}
 Solution current?    : Yes
 Ball activity        : ON
 Ball request         : solve
 Cross over angle          : 35.0933
 Residual Force Vector     : {-1.06406, -1.238, -0.446408}
                                          -6
 Displacement Residual     : 7.99865 10
****
 Contact name              : DpCi
  Max Normal Load          : 16.6082
  Max Normal Stress        : -214746.
  Displacement             : 0.00010838
  Contact a-length         : 0.0179577
  Contact b-length         : 0.00218352
  Contact area             : 0.000123185
  Distance to Corner       : -0.00893665
  Effective Speed Factor   : 2.659
  Load-Life Factor         : 12.8081
                                        8
  Expected Average Life    : 1.02264 10
****
 Contact name              : DiCi
  Max Normal Load          : 14.4716
  Max Normal Stress        : -194241.
  Displacement             : 0.0000886746
  Contact a-length         : 0.0162434
  Contact b-length         : 0.00197513
  Contact area             : 0.000100791
  Distance to Corner: Dp   : 0.0100066
  Distance to Corner: Ds   : 0.0100066
  Effective Speed Factor   : 2.659
  Load-Life Factor         : 14.6991
                                        8
  Expected Average Life    : 1.77397 10
****
 Contact name              : DsCo
  Max Normal Load          : 22.8225
  Max Normal Stress        : -234326.
  Displacement             : 0.000129064
  Contact a-length         : 0.0195965
  Contact b-length         : 0.00238304
  Contact area             : 0.00014671
  Distance to Corner       : -0.0105754
  Effective Speed Factor   : 2.659
  Load-Life Factor         : 9.32063
                                        7
  Expected Average Life    : 2.8679 10
```

```
=========================
 Ball number          : 27
 Ball angle           : 90.
 Ball position        : {2.38153, -0.208357, 0.}
 Solution current?    : Yes
 Ball activity        : ON
 Ball request         : solve
 Cross over angle          : 34.9766
 Residual Force Vector     : {-0.828684, -1.42657, -0.442268}
                                          -6
 Displacement Residual     : 8.05853 10
****
 Contact name              : DpCi
  Max Normal Load          : 16.6894
  Max Normal Stress        : -215077.
  Displacement             : 0.000108714
  Contact a-length         : 0.0179854
  Contact b-length         : 0.00218688
  Contact area             : 0.000123565
  Distance to Corner       : -0.00896431
  Effective Speed Factor   : 2.659
  Load-Life Factor         : 12.7458
                                        8
  Expected Average Life    : 1.0029 10
****
 Contact name              : DiCi
  Max Normal Load          : 14.4901
  Max Normal Stress        : -194248.
  Displacement             : 0.0000886811
  Contact a-length         : 0.016244
  Contact b-length         : 0.0019752
  Contact area             : 0.000100799
  Distance to Corner: Dp   : 0.010006
  Distance to Corner: Ds   : 0.010006
  Effective Speed Factor   : 2.659
  Load-Life Factor         : 14.6804
                                        8
  Expected Average Life    : 1.76496 10
****
 Contact name              : DsCo
  Max Normal Load          : 22.8815
  Max Normal Stress        : -234554.
  Displacement             : 0.000129316
  Contact a-length         : 0.0196156
  Contact b-length         : 0.00238536
  Contact area             : 0.000146996
  Distance to Corner       : -0.0105945
  Effective Speed Factor   : 2.659
  Load-Life Factor         : 9.2966
                                        7
  Expected Average Life    : 2.83845 10
```

```
=========================
 Ball number          : 28
 Ball angle           : 80.
 Ball position        : {2.39363, 0.209416, 0.}
 Solution current?    : Yes
 Ball activity        : ON
 Ball request         : solve
 Cross over angle          : 34.8604
 Residual Force Vector     : {-0.560185, -1.57019, -0.438083}
                                          -6
 Displacement Residual     : 8.11804 10
****
 Contact name              : DpCi
  Max Normal Load          : 16.7703
  Max Normal Stress        : -215406.
  Displacement             : 0.000109046
  Contact a-length         : 0.0180129
  Contact b-length         : 0.00219022
  Contact area             : 0.000123943
  Distance to Corner       : -0.0089918
  Effective Speed Factor   : 2.659
  Load-Life Factor         : 12.6843
                                        7
  Expected Average Life    : 9.8367 10
****
 Contact name              : DiCi
  Max Normal Load          : 14.5081
  Max Normal Stress        : -194254.
  Displacement             : 0.0000886863
  Contact a-length         : 0.0162445
  Contact b-length         : 0.00197526
  Contact area             : 0.000100805
  Distance to Corner: Dp   : 0.0100055
  Distance to Corner: Ds   : 0.0100055
  Effective Speed Factor   : 2.659
  Load-Life Factor         : 14.6621
                                          8
  Expected Average Life    : 1.75619 10
****
 Contact name              : DsCo
  Max Normal Load          : 22.9401
  Max Normal Stress        : -234781.
  Displacement             : 0.000129566
  Contact a-length         : 0.0196346
  Contact b-length         : 0.00238767
  Contact area             : 0.000147281
  Distance to Corner       : -0.0106135
  Effective Speed Factor   : 2.659
  Load-Life Factor         : 9.27284
                                          7
  Expected Average Life    : 2.80953 10
```

```
=========================
 Ball number          : 29
 Ball angle           : 70.
 Ball position        : {2.33264, 0.62503, 0.}
 Solution current?    : Yes
 Ball activity        : ON
 Ball request         : solve
 Cross over angle          : 34.7447
 Residual Force Vector     : {-0.26717, -1.66311, -0.433853}
                                        -6
 Displacement Residual     : 8.17717 10
****
 Contact name              : DpCi
  Max Normal Load          : 16.8511
  Max Normal Stress        : -215732.
  Displacement             : 0.000109377
  Contact a-length         : 0.0180402
  Contact b-length         : 0.00219354
  Contact area             : 0.000124319
  Distance to Corner       : -0.0090191
  Effective Speed Factor   : 2.659
  Load-Life Factor         : 12.6235
                                       7
  Expected Average Life    : 9.64939 10
****
 Contact name              : DiCi
  Max Normal Load          : 14.5258
  Max Normal Stress        : -194258.
  Displacement             : 0.0000886902
  Contact a-length         : 0.0162448
  Contact b-length         : 0.00197531
  Contact area             : 0.000100809
  Distance to Corner: Dp   : 0.0100052
  Distance to Corner: Ds   : 0.0100052
  Effective Speed Factor   : 2.659
  Load-Life Factor         : 14.6443
                                       8
  Expected Average Life    : 1.74768 10
****
 Contact name              : DsCo
  Max Normal Load          : 22.9984
  Max Normal Stress        : -235006.
  Displacement             : 0.000129814
  Contact a-length         : 0.0196534
  Contact b-length         : 0.00238996
  Contact area             : 0.000147563
  Distance to Corner       : -0.0106323
  Effective Speed Factor   : 2.659
  Load-Life Factor         : 9.24932
                                       7
  Expected Average Life    : 2.78114 10
```

```
=========================
 Ball number          : 30
 Ball angle           : 60.
 Ball position        : {2.19968, 1.02573, 0.}
 Solution current?    : Yes
 Ball activity        : ON
 Ball request         : solve
 Cross over angle          : 34.6294
 Residual Force Vector     : {0.0407676, -1.70122, -0.429582}
                                          -6
 Displacement Residual     : 8.23593 10
****
 Contact name              : DpCi
  Max Normal Load          : 16.9318
  Max Normal Stress        : -216057.
  Displacement             : 0.000109706
  Contact a-length         : 0.0180673
  Contact b-length         : 0.00219684
  Contact area             : 0.000124693
  Distance to Corner       : -0.00904623
  Effective Speed Factor   : 2.659
  Load-Life Factor         : 12.5634
                                        7
  Expected Average Life    : 9.46691 10
****
 Contact name              : DiCi
  Max Normal Load          : 14.543
  Max Normal Stress        : -194261.
  Displacement             : 0.0000886927
  Contact a-length         : 0.0162451
  Contact b-length         : 0.00197533
  Contact area             : 0.000100812
  Distance to Corner: Dp   : 0.0100049
  Distance to Corner: Ds   : 0.0100049
  Effective Speed Factor   : 2.659
  Load-Life Factor         : 14.627
                                        8
  Expected Average Life    : 1.73941 10
****
 Contact name              : DsCo
  Max Normal Load          : 23.0565
  Max Normal Stress        : -235230.
  Displacement             : 0.000130062
  Contact a-length         : 0.0196721
  Contact b-length         : 0.00239223
  Contact area             : 0.000147844
  Distance to Corner       : -0.010651
  Effective Speed Factor   : 2.659
  Load-Life Factor         : 9.22605
                                        7
  Expected Average Life    : 2.75325 10
```

```
=========================
 Ball number          : 31
 Ball angle           : 50.
 Ball position        : {1.99811, 1.39909, 0.}
 Solution current?    : Yes
 Ball activity        : ON
 Ball request         : solve
 Cross over angle          : 34.5147
 Residual Force Vector     : {0.353368, -1.68224, -0.425269}
                                        -6
 Displacement Residual     : 8.29432 10
****
 Contact name              : DpCi
  Max Normal Load          : 17.0122
  Max Normal Stress        : -216379.
  Displacement             : 0.000110034
  Contact a-length         : 0.0180943
  Contact b-length         : 0.00220011
  Contact area             : 0.000125065
  Distance to Corner       : -0.00907318
  Effective Speed Factor   : 2.659
  Load-Life Factor         : 12.504
                                       7
  Expected Average Life    : 9.28913 10
****
 Contact name              : DiCi
  Max Normal Load          : 14.5598
  Max Normal Stress        : -194262.
  Displacement             : 0.0000886939
  Contact a-length         : 0.0162452
  Contact b-length         : 0.00197535
  Contact area             : 0.000100813
  Distance to Corner: Dp   : 0.0100048
  Distance to Corner: Ds   : 0.0100048
  Effective Speed Factor   : 2.659
  Load-Life Factor         : 14.61
                                       8
  Expected Average Life    : 1.73137 10
****
 Contact name              : DsCo
  Max Normal Load          : 23.1142
  Max Normal Stress        : -235452.
  Displacement             : 0.000130307
  Contact a-length         : 0.0196907
  Contact b-length         : 0.00239449
  Contact area             : 0.000148124
  Distance to Corner       : -0.0106696
  Effective Speed Factor   : 2.659
  Load-Life Factor         : 9.20302
                                       7
  Expected Average Life    : 2.72587 10
```

```
==========================
 Ball number          : 32
 Ball angle           : 40.
 Ball position        : {1.73339, 1.73339, 0.}
 Solution current?    : Yes
 Ball activity        : ON
 Ball request         : solve
 Cross over angle          : 34.4005
 Residual Force Vector     : {0.660045, -1.6058, -0.420916}
                                          -6
 Displacement Residual     : 8.35233 10
****
 Contact name              : DpCi
  Max Normal Load          : 17.0925
  Max Normal Stress        : -216699.
  Displacement             : 0.00011036
  Contact a-length         : 0.018121
  Contact b-length         : 0.00220337
  Contact area             : 0.000125435
  Distance to Corner       : -0.00909995
  Effective Speed Factor   : 2.659
  Load-Life Factor         : 12.4453
                                        7
  Expected Average Life    : 9.11589 10
****
 Contact name              : DiCi
  Max Normal Load          : 14.5763
  Max Normal Stress        : -194262.
  Displacement             : 0.0000886937
  Contact a-length         : 0.0162452
  Contact b-length         : 0.00197534
  Contact area             : 0.000100813
  Distance to Corner: Dp   : 0.0100048
  Distance to Corner: Ds   : 0.0100048
  Effective Speed Factor   : 2.659
  Load-Life Factor         : 14.5935
                                        8
  Expected Average Life    : 1.72356 10
****
 Contact name              : DsCo
  Max Normal Load          : 23.1715
  Max Normal Stress        : -235673.
  Displacement             : 0.000130552
  Contact a-length         : 0.0197092
  Contact b-length         : 0.00239673
  Contact area             : 0.000148401
  Distance to Corner       : -0.0106881
  Effective Speed Factor   : 2.659
  Load-Life Factor         : 9.18023
                                        7
  Expected Average Life    : 2.69897 10
```

```
==========================
 Ball number          : 33
 Ball angle           : 30.
 Ball position        : {1.41303, 2.01802, 0.}
 Solution current?    : Yes
 Ball activity        : ON
 Ball request         : solve
 Cross over angle          : 34.2867
 Residual Force Vector     : {0.950249, -1.4735, -0.416525}
                                          -6
 Displacement Residual     : 8.40996 10
****
 Contact name              : DpCi
  Max Normal Load          : 17.1725
  Max Normal Stress        : -217017.
  Displacement             : 0.000110684
  Contact a-length         : 0.0181476
  Contact b-length         : 0.0022066
  Contact area             : 0.000125804
  Distance to Corner       : -0.00912655
  Effective Speed Factor   : 2.659
  Load-Life Factor         : 12.3872
                                        7
  Expected Average Life    : 8.94706 10
****
 Contact name              : DiCi
  Max Normal Load          : 14.5924
  Max Normal Stress        : -194261.
  Displacement             : 0.0000886923
  Contact a-length         : 0.016245
  Contact b-length         : 0.00197533
  Contact area             : 0.000100811
  Distance to Corner: Dp   : 0.010005
  Distance to Corner: Ds   : 0.010005
  Effective Speed Factor   : 2.659
  Load-Life Factor         : 14.5775
                                        8
  Expected Average Life    : 1.71599 10
****
 Contact name              : DsCo
  Max Normal Load          : 23.2286
  Max Normal Stress        : -235892.
  Displacement             : 0.000130794
  Contact a-length         : 0.0197275
  Contact b-length         : 0.00239896
  Contact area             : 0.000148677
  Distance to Corner       : -0.0107064
  Effective Speed Factor   : 2.659
  Load-Life Factor         : 9.15768
                                        7
  Expected Average Life    : 2.67254 10
```

```
=========================
 Ball number          : 34
 Ball angle           : 20.
 Ball position        : {1.04627, 2.24374, 0.}
 Solution current?    : Yes
 Ball activity        : ON
 Ball request         : solve
 Cross over angle          : 34.1735
 Residual Force Vector     : {1.21382, -1.28886, -0.412098}
                                                  -6
 Displacement Residual     : 8.46722 10
****
 Contact name              : DpCi
  Max Normal Load          : 17.2524
  Max Normal Stress        : -217333.
  Displacement             : 0.000111007
  Contact a-length         : 0.0181741
  Contact b-length         : 0.00220982
  Contact area             : 0.000126171
  Distance to Corner       : -0.00915297
  Effective Speed Factor   : 2.659
  Load-Life Factor         : 12.3299
                                        7
  Expected Average Life    : 8.78251 10
****
 Contact name              : DiCi
  Max Normal Load          : 14.6081
  Max Normal Stress        : -194258.
  Displacement             : 0.0000886896
  Contact a-length         : 0.0162448
  Contact b-length         : 0.0019753
  Contact area             : 0.000100808
  Distance to Corner: Dp   : 0.0100052
  Distance to Corner: Ds   : 0.0100052
  Effective Speed Factor   : 2.659
  Load-Life Factor         : 14.5618
                                        8
  Expected Average Life    : 1.70863 10
****
 Contact name              : DsCo
  Max Normal Load          : 23.2854
  Max Normal Stress        : -236109.
  Displacement             : 0.000131036
  Contact a-length         : 0.0197457
  Contact b-length         : 0.00240117
  Contact area             : 0.000148952
  Distance to Corner       : -0.0107246
  Effective Speed Factor   : 2.659
  Load-Life Factor         : 9.13535
                                        7
  Expected Average Life    : 2.64658 10
```

```
=========================
 Ball number          : 35
 Ball angle           : 10.
 Ball position        : {0.643902, 2.40308, 0.}
 Solution current?    : Yes
 Ball activity        : ON
 Ball request         : solve
 Cross over angle         : 34.0607
 Residual Force Vector    : {1.44136, -1.05726, -0.407635}
                                        -6
 Displacement Residual    : 8.5241 10
****
 Contact name             : DpCi
  Max Normal Load         : 17.3321
  Max Normal Stress       : -217647.
  Displacement            : 0.000111327
  Contact a-length        : 0.0182003
  Contact b-length        : 0.00221301
  Contact area            : 0.000126535
  Distance to Corner      : -0.00917923
  Effective Speed Factor  : 2.659
  Load-Life Factor        : 12.2732
                                      7
  Expected Average Life   : 8.62211 10
****
 Contact name             : DiCi
  Max Normal Load         : 14.6233
  Max Normal Stress       : -194253.
  Displacement            : 0.0000886857
  Contact a-length        : 0.0162444
  Contact b-length        : 0.00197525
  Contact area            : 0.000100804
  Distance to Corner: Dp  : 0.0100056
  Distance to Corner: Ds  : 0.0100056
  Effective Speed Factor  : 2.659
  Load-Life Factor        : 14.5466
                                      8
  Expected Average Life   : 1.70149 10
****
 Contact name             : DsCo
  Max Normal Load         : 23.3418
  Max Normal Stress       : -236325.
  Displacement            : 0.000131276
  Contact a-length        : 0.0197637
  Contact b-length        : 0.00240337
  Contact area            : 0.000149224
  Distance to Corner      : -0.0107426
  Effective Speed Factor  : 2.659
  Load-Life Factor        : 9.11326
                                      7
  Expected Average Life   : 2.62107 10
```

```
==========================
 Ball number          : 36
 Ball angle           : 0.
 Ball position        : {0.217889, 2.49049, 0.}
 Solution current?    : Yes
 Ball activity        : ON
 Ball request         : solve
 Cross over angle          : 42.2046
 Residual Force Vector     : {0.261287, 0.400344, -0.245949}
                                          -6
 Displacement Residual     : 2.05483 10
****
 Contact name              : DpCo
  Max Normal Load          : 16.3828
  Max Normal Stress        : -211181.
  Displacement             : 0.000104821
  Contact a-length         : 0.0176604
  Contact b-length         : 0.00214751
  Contact area             : 0.000119148
  Distance to Corner       : -0.00863934
  Effective Speed Factor   : 2.659
  Load-Life Factor         : 12.9843
                                        8
  Expected Average Life    : 1.08009 10
****
 Contact name              : DiCi
  Max Normal Load          : 14.616
  Max Normal Stress        : -200308.
  Displacement             : 0.0000943006
  Contact a-length         : 0.0167508
  Contact b-length         : 0.00203682
  Contact area             : 0.000107186
  Distance to Corner: Dp   : 0.00949923
  Distance to Corner: Ds   : 0.00949923
  Effective Speed Factor   : 2.659
  Load-Life Factor         : 14.5539
                                        8
  Expected Average Life    : 1.70491 10
****
 Contact name              : DsCi
  Max Normal Load          : 21.5507
  Max Normal Stress        : -229236.
  Displacement             : 0.000123491
  Contact a-length         : 0.0191688
  Contact b-length         : 0.00233067
  Contact area             : 0.000140355
  Distance to Corner       : -0.0101477
  Effective Speed Factor   : 2.659
  Load-Life Factor         : 9.87067
                                        7
  Expected Average Life    : 3.6072 10
```

```
=========================
Summary of Performance
=========================

 Applied Angular Twist (degrees) : 0.337675

 Total Internal Loads (Fx,Fy,Fz)
 Primary Disk                    : {-306.402, 54.4919, -320.664}
 Intermediate Disk               : {7.82861, -0.290143, -25.0068}
 Secondary Disk                  : {311.233, -41.2871, 357.896}

 Total Axial Torque (Tz)
 Primary Disk                    : 30.7383
 Intermediate Disk               : 1237.7
 Secondary Disk                  : -1199.6

 Torque Ratio: Ds/Dp             : 39.0262
 Torque Ratio: Di/Dp             : 40.2657
 Torque Ratio: Di/Ds             : 1.03176

 Tosional Stiffness (T/rad)      : 203544.

 Average Residual Force          : {-0.351653, -0.35874, -0.339563}
                                          -6
 Average Displacement Residual   : 4.86198 10

 Dp Speed                        : 10.
 Ds Speed                        : 0.27027
 Speed Conversion Ratio          : 37.
 Effective N.D. Speed            : 20.
 Minimum Expected Average Life
                                            7
                          hours  : 8.62211 10
                          years  : 9842.59

  Average Load-Life Factor: Dp   : 13.1243
  Average Load-Life Factor: Di   : 14.7147
  Average Load-Life Factor: Ds   : 9.70511
```

```
=========================
Summary of Extreme Values
=========================

 Maximum Compressive Contact Stress Dp : -217647.
 At ball number                        : 35
 Maximum Compressive Contact Stress Di : -200308.
 At ball number                        : 36
 Maximum Compressive Contact Stress Ds : -229236.
 At ball number                        : 36

 Maximum Ball Deflection Dp            : 0.000111327
 At ball number                        : 35
 Maximum Ball Deflection Di            : 0.0000943006
 At ball number                        : 36
 Maximum Ball Deflection Ds            : 0.000131276
 At ball number                        : 35

 Maximum Ball Contact Area Dp          : 0.000126535
 At ball number                        : 35
 Maximum Ball Contact Area Di          : 0.000107186
 At ball number                        : 36
 Maximum Ball Contact Area Ds          : 0.000149224
 At ball number                        : 35

 Maximum Ball a-patch Dp               : 0.0182003
 At ball number                        : 35
 Maximum Ball a-patch Di               : 0.0167508
 At ball number                        : 36
 Maximum Ball a-patch Ds               : 0.0197637
 At ball number                        : 35

 Maximum Ball b-patch Dp               : 0.00221301
 At ball number                        : 35
 Maximum Ball b-patch Di               : 0.00203682
 At ball number                        : 36
 Maximum Ball b-patch Ds               : 0.00240337
 At ball number                        : 35

 Minimum Distance to Dp Corner         : -0.00917923
 At ball number                        : 35
 Minimum Distance to Di Corner: Dp     : 0.00949923
 At ball number                        : 36
 Minimum Distance to Di Corner: Ds     : 0.00949923
 At ball number                        : 36
 Minimum Distance to Ds Corner         : -0.0107426
 At ball number                        : 35

=========================
=========================
```

SYNKdrive™ Speed Conversion Technology

Analytical and Numerical Results

Precision Speed Reducer for Robotics and Manufacturing (TRP-93-009)

Conforming Race Design
Conforming Percentage: 52%
Flank Angle: 35 degrees
Applied Torque: 1200 in-lbs

1.0 Geometric Definition

```
Summary of Conforming Race Parameters
-------------------------------------
BallDiameter                    = 0.15625

ConformingDiameter              = 0.1625
ConformingPercentage            = 52.

PrimaryFlankAngleDegrees        = 35.
IntermediateFlankAngleDegrees   = 0.
SecondaryFlankAngleDegrees      = 35.

PrimaryFractionBallDepth        = 0.3
SecondaryFractionBallDepth      = 0.3

ToleranceFraction               = 0.01

ContactToCornerDistance for Dp = 0.0165545
ContactToCornerDistance for Ds = 0.0165545
```

Summary of Primary Disk Parameters

PrimaryDiskThickness	= 0.5
PrimaryDiskDiameter	= 6.
PrimaryRadiusMax	= 2.5
PrimaryRadiusMin	= 2.28125
PrimaryDisplacement	= 0.21875
PrimaryPhiIncrement	= 180.
PrimaryNumberLobes	= 1

Summary of Intermediate Disk Parameters

IntermediateDiskThickness	= 0.0525
IntermediateDiskDiameter	= 6.
IntermediateRadiusMax	= 2.5
IntermediateRadiusMin	= 2.28125
IntermediateDisplacement	= 0.21875
IntermediateSlotWidth	= 0.15625
IntermediateTotalSlots	= 36
IntermediateGammaIncrement	= 10.

Summary of Secondary Disk Parameters

SecondaryDiskThickness	= 0.5
SecondaryDiskDiameter	= 6.
SecondaryRadiusMax	= 2.5
SecondaryRadiusMin	= 2.28125
SecondaryDisplacement	= 0.21875
SecondaryPhiIncrement	= 4.86486
SecondaryNumberLobes	= 37

2.0 Ball Race Section Profile

Primary and Secondary Race Profiles

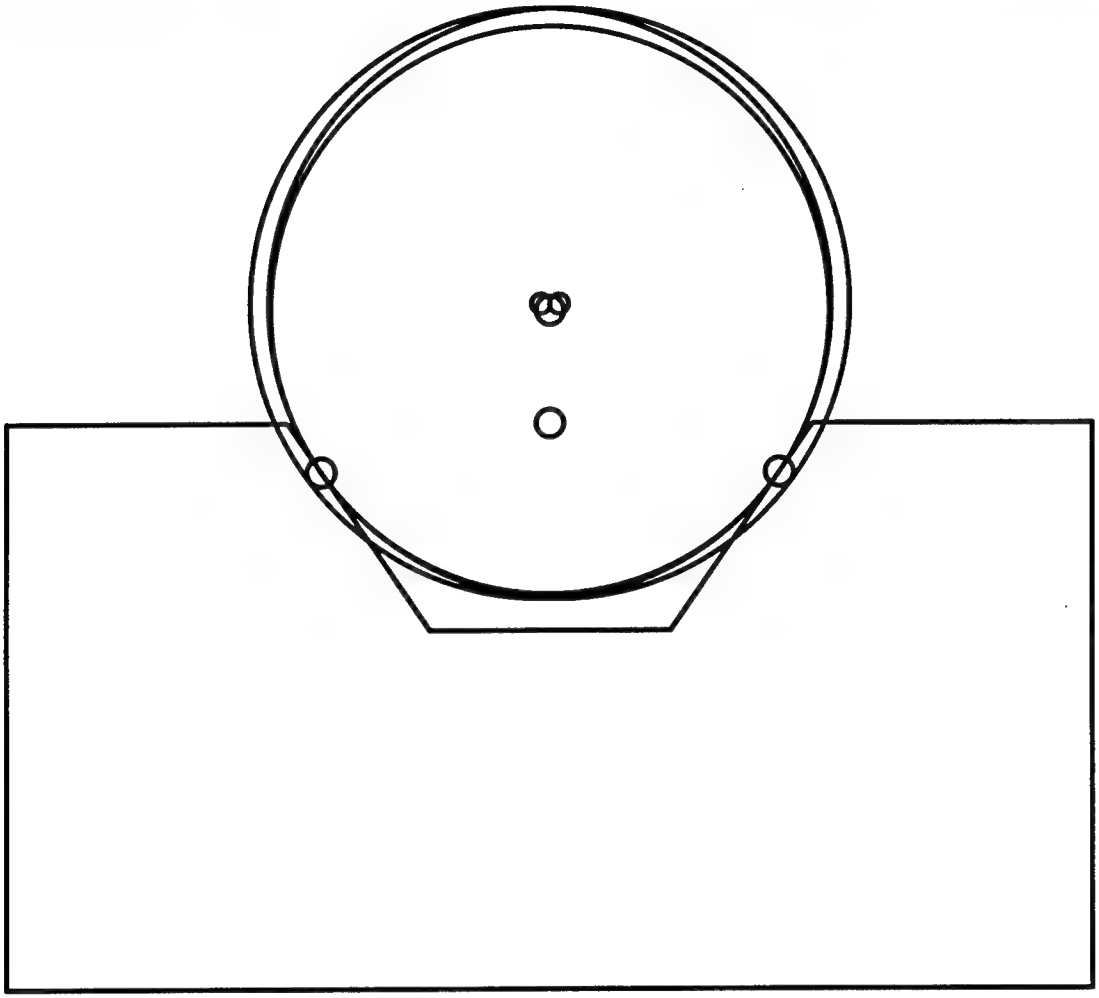

3.0 Constraints and Kinematic Results

```
Summary of Drive Constraint Parameters
--------------------------------------
PrimaryNumberLobes              = 1
SecondaryNumberLobes            = 37
IntermediateTotalSlots          = 36 (requested balls)

BallConjugateDirection          = forward drive
BallConstraintCondition         = exactly constrained

Conjugate constraints           = 36
Forward drive condition         = 36
Reverser drive condition        = 38
Predicted speed ratio           = 37 to 1


Summary of Kinematic Solver Results
-----------------------------------
PrimaryAngleStart               = 0.
PrimaryAngleFinish              = 5.
PrimaryAngleDelta               = 1.
PrimaryAngleNumber              = 6.
Speed Conversion Ratio (Dp:Ds) = 37. to 1

PrimaryDiskDeltaAngle:
   Step          Dp Angle          Ds Angle
   ----          --------          --------
                                           -17
    1              0.              2.77556 10
    2              1.              0.027027
    3              2.              0.0540541
    4              3.              0.0810811
    5              4.              0.108108
    6              5.              0.135135
```

4.0 Numerical Results

```
================================================
Summary of Stress and Displacement Calculations
================================================
 Calculated for kinematic solution : 6
 Angular Deformation               : 0.361843
 Applied Torque                    : 1200.06
```

```
=========================
 Ball number          : 1
 Ball angle           : 350.
 Ball position        : {-0.21683, 2.47838, 0.}
 Solution current?    : Yes
 Ball activity        : ON
 Ball request         : solve
 Cross over angle         : 39.9249
 Residual Force Vector    : {0.353806, 0.371661, -0.211966}
                                                  -6
 Displacement Residual    : 2.22825 10
****
 Contact name             : DpCo
  Max Normal Load         : 17.8859
  Max Normal Stress       : -217181.
  Displacement            : 0.000110862
  Contact a-length        : 0.0181622
  Contact b-length        : 0.00220853
  Contact area            : 0.000126015
  Distance to Corner      : -0.0016077
  Effective Speed Factor  : 2.659
  Load-Life Factor        : 11.8931
                                        7
  Expected Average Life   : 7.60272 10
****
 Contact name             : DiCi
  Max Normal Load         : 14.785
  Max Normal Stress       : -200633.
  Displacement            : 0.0000946071
  Contact a-length        : 0.016778
  Contact b-length        : 0.00204013
  Contact area            : 0.000107534
  Distance to Corner: Dp  : 0.00947203
  Distance to Corner: Ds  : 0.00947203
  Effective Speed Factor  : 2.659
  Load-Life Factor        : 14.3875
                                        8
  Expected Average Life   : 1.62828 10
****
 Contact name             : DsCi
  Max Normal Load         : 22.6498
  Max Normal Stress       : -233385.
  Displacement            : 0.000128002
  Contact a-length        : 0.0195158
  Contact b-length        : 0.00237286
  Contact area            : 0.000145482
  Distance to Corner      : -0.00296129
  Effective Speed Factor  : 2.659
  Load-Life Factor        : 9.3917
                                        7
  Expected Average Life   : 2.95638 10
```

```
==========================
 Ball number          : 2
 Ball angle           : 340.
 Ball position        : {-0.640757, 2.39134, 0.}
 Solution current?    : Yes
 Ball activity        : ON
 Ball request         : solve
 Cross over angle         : 40.0297
 Residual Force Vector    : {0.272893, 0.42236, -0.212043}
                                          -6
 Displacement Residual    : 2.18886 10
****
 Contact name             : DpCo
  Max Normal Load         : 17.8195
  Max Normal Stress       : -216903.
  Displacement            : 0.000110578
  Contact a-length        : 0.018139
  Contact b-length        : 0.0022057
  Contact area            : 0.000125692
  Distance to Corner      : -0.00158445
  Effective Speed Factor  : 2.659
  Load-Life Factor        : 11.9375
                                       7
  Expected Average Life   : 7.71682 10
****
 Contact name             : DiCi
  Max Normal Load         : 14.7698
  Max Normal Stress       : -200608.
  Displacement            : 0.0000945829
  Contact a-length        : 0.0167758
  Contact b-length        : 0.00203987
  Contact area            : 0.000107507
  Distance to Corner: Dp  : 0.00947417
  Distance to Corner: Ds  : 0.00947417
  Effective Speed Factor  : 2.659
  Load-Life Factor        : 14.4024
                                       8
  Expected Average Life   : 1.63502 10
****
 Contact name             : DsCi
  Max Normal Load         : 22.5968
  Max Normal Stress       : -233191.
  Displacement            : 0.000127789
  Contact a-length        : 0.0194996
  Contact b-length        : 0.00237088
  Contact area            : 0.00014524
  Distance to Corner      : -0.00294505
  Effective Speed Factor  : 2.659
  Load-Life Factor        : 9.41374
                                       7
  Expected Average Life   : 2.98423 10
```

```
==========================
 Ball number          : 3
 Ball angle           : 330.
 Ball position        : {-1.04114, 2.23273, 0.}
 Solution current?    : Yes
 Ball activity        : ON
 Ball request         : solve
 Cross over angle          : 40.1349
 Residual Force Vector     : {0.185522, 0.456346, -0.212061}
                                          -6
 Displacement Residual     : 2.14948 10
****
 Contact name              : DpCo
  Max Normal Load          : 17.7528
  Max Normal Stress        : -216623.
  Displacement             : 0.000110293
  Contact a-length         : 0.0181156
  Contact b-length         : 0.00220285
  Contact area             : 0.000125368
  Distance to Corner       : -0.00156105
  Effective Speed Factor   : 2.659
  Load-Life Factor         : 11.9823
                                        7
  Expected Average Life    : 7.83339 10
****
 Contact name              : DiCi
  Max Normal Load          : 14.7543
  Max Normal Stress        : -200581.
  Displacement             : 0.0000945577
  Contact a-length         : 0.0167736
  Contact b-length         : 0.0020396
  Contact area             : 0.000107478
  Distance to Corner: Dp   : 0.00947641
  Distance to Corner: Ds   : 0.00947641
  Effective Speed Factor   : 2.659
  Load-Life Factor         : 14.4175
                                        8
  Expected Average Life    : 1.64189 10
****
 Contact name              : DsCi
  Max Normal Load          : 22.5434
  Max Normal Stress        : -232995.
  Displacement             : 0.000127575
  Contact a-length         : 0.0194832
  Contact b-length         : 0.0023689
  Contact area             : 0.000144996
  Distance to Corner       : -0.00292871
  Effective Speed Factor   : 2.659
  Load-Life Factor         : 9.43601
                                        7
  Expected Average Life    : 3.01258 10
```

```
==========================
 Ball number          : 4
 Ball angle           : 320.
 Ball position        : {-1.40606, 2.00806, 0.}
 Solution current?    : Yes
 Ball activity        : ON
 Ball request         : solve
 Cross over angle          : 40.2406
 Residual Force Vector     : {0.0950169, 0.47299, -0.212019}
                                                  -6
 Displacement Residual     : 2.11013 10
****
 Contact name              : DpCo
  Max Normal Load          : 17.686
  Max Normal Stress        : -216342.
  Displacement             : 0.000110007
  Contact a-length         : 0.018092
  Contact b-length         : 0.00219999
  Contact area             : 0.000125043
  Distance to Corner       : -0.00153751
  Effective Speed Factor   : 2.659
  Load-Life Factor         : 12.0276
                                        7
  Expected Average Life    : 7.95249 10
****
 Contact name              : DiCi
  Max Normal Load          : 14.7386
  Max Normal Stress        : -200553.
  Displacement             : 0.0000945314
  Contact a-length         : 0.0167713
  Contact b-length         : 0.00203932
  Contact area             : 0.000107448
  Distance to Corner: Dp   : 0.00947875
  Distance to Corner: Ds   : 0.00947875
  Effective Speed Factor   : 2.659
  Load-Life Factor         : 14.4329
                                        8
  Expected Average Life    : 1.6489 10
****
 Contact name              : DsCi
  Max Normal Load          : 22.4898
  Max Normal Stress        : -232799.
  Displacement             : 0.000127359
  Contact a-length         : 0.0194668
  Contact b-length         : 0.0023669
  Contact area             : 0.000144752
  Distance to Corner       : -0.00291226
  Effective Speed Factor   : 2.659
  Load-Life Factor         : 9.45852
                                        7
  Expected Average Life    : 3.04142 10
```

```
==========================
 Ball number          : 5
 Ball angle           : 310.
 Ball position        : {-1.7248, 1.7248, 0.}
 Solution current?    : Yes
 Ball activity        : ON
 Ball request         : solve
 Cross over angle          : 40.3468
 Residual Force Vector     : {0.00471047, 0.472298, -0.211916}
                                                  -6
 Displacement Residual     : 2.07079 10
****
 Contact name              : DpCo
  Max Normal Load          : 17.6189
  Max Normal Stress        : -216059.
  Displacement             : 0.000109719
  Contact a-length         : 0.0180683
  Contact b-length         : 0.00219711
  Contact area             : 0.000124715
  Distance to Corner       : -0.00151383
  Effective Speed Factor   : 2.659
  Load-Life Factor         : 12.0734
                                        7
  Expected Average Life    : 8.0742 10
****
 Contact name              : DiCi
  Max Normal Load          : 14.7226
  Max Normal Stress        : -200524.
  Displacement             : 0.000094504
  Contact a-length         : 0.0167688
  Contact b-length         : 0.00203902
  Contact area             : 0.000107417
  Distance to Corner: Dp   : 0.00948117
  Distance to Corner: Ds   : 0.00948117
  Effective Speed Factor   : 2.659
  Load-Life Factor         : 14.4485
                                        8
  Expected Average Life    : 1.65605 10
****
 Contact name              : DsCi
  Max Normal Load          : 22.4358
  Max Normal Stress        : -232601.
  Displacement             : 0.000127143
  Contact a-length         : 0.0194502
  Contact b-length         : 0.00236489
  Contact area             : 0.000144506
  Distance to Corner       : -0.00289571
  Effective Speed Factor   : 2.659
  Load-Life Factor         : 9.48126
                                        7
  Expected Average Life    : 3.07077 10
```

```
=========================
 Ball number          : 6
 Ball angle           : 300.
 Ball position        : {-1.98815, 1.39212, 0.}
 Solution current?    : Yes
 Ball activity        : ON
 Ball request         : solve
 Cross over angle          : 40.4534
 Residual Force Vector     : {-0.0821734, 0.454905, -0.211751}
                                          -6
 Displacement Residual     : 2.03148 10
****
 Contact name              : DpCo
  Max Normal Load          : 17.5517
  Max Normal Stress        : -215774.
  Displacement             : 0.00010943
  Contact a-length         : 0.0180445
  Contact b-length         : 0.00219421
  Contact area             : 0.000124387
  Distance to Corner       : -0.00149
  Effective Speed Factor   : 2.659
  Load-Life Factor         : 12.1196
                                        7
  Expected Average Life    : 8.19858 10
****
 Contact name              : DiCi
  Max Normal Load          : 14.7065
  Max Normal Stress        : -200494.
  Displacement             : 0.0000944755
  Contact a-length         : 0.0167663
  Contact b-length         : 0.00203871
  Contact area             : 0.000107385
  Distance to Corner: Dp   : 0.0094837
  Distance to Corner: Ds   : 0.0094837
  Effective Speed Factor   : 2.659
  Load-Life Factor         : 14.4644
                                        8
  Expected Average Life    : 1.66335 10
****
 Contact name              : DsCi
  Max Normal Load          : 22.3816
  Max Normal Stress        : -232402.
  Displacement             : 0.000126925
  Contact a-length         : 0.0194336
  Contact b-length         : 0.00236286
  Contact area             : 0.000144258
  Distance to Corner       : -0.00287906
  Effective Speed Factor   : 2.659
  Load-Life Factor         : 9.50423
                                        7
  Expected Average Life    : 3.10064 10
```

```
=========================
 Ball number          : 7
 Ball angle           : 290.
 Ball position        : {-2.18867, 1.02059, 0.}
 Solution current?    : Yes
 Ball activity        : ON
 Ball request         : solve
 Cross over angle          : 40.5604
 Residual Force Vector     : {-0.162634, 0.422025, -0.211524}
                                          -6
 Displacement Residual     : 1.99219 10
****
 Contact name              : DpCo
  Max Normal Load          : 17.4843
  Max Normal Stress        : -215487.
  Displacement             : 0.000109139
  Contact a-length         : 0.0180205
  Contact b-length         : 0.0021913
  Contact area             : 0.000124056
  Distance to Corner       : -0.00146603
  Effective Speed Factor   : 2.659
  Load-Life Factor         : 12.1663
                                        7
  Expected Average Life    : 8.3257 10
****
 Contact name              : DiCi
  Max Normal Load          : 14.6901
  Max Normal Stress        : -200463.
  Displacement             : 0.000094446
  Contact a-length         : 0.0167637
  Contact b-length         : 0.00203839
  Contact area             : 0.000107351
  Distance to Corner: Dp   : 0.00948632
  Distance to Corner: Ds   : 0.00948632
  Effective Speed Factor   : 2.659
  Load-Life Factor         : 14.4805
                                        8
  Expected Average Life    : 1.67078 10
****
 Contact name              : DsCi
  Max Normal Load          : 22.3271
  Max Normal Stress        : -232201.
  Displacement             : 0.000126707
  Contact a-length         : 0.0194168
  Contact b-length         : 0.00236082
  Contact area             : 0.00014401
  Distance to Corner       : -0.0028623
  Effective Speed Factor   : 2.659
  Load-Life Factor         : 9.52745
                                        7
  Expected Average Life    : 3.13105 10
```

```
=========================
 Ball number          : 8
 Ball angle           : 280.
 Ball position        : {-2.32091, 0.621885, 0.}
 Solution current?    : Yes
 Ball activity        : ON
 Ball request         : solve
 Cross over angle          : 40.6679
 Residual Force Vector     : {-0.233997, 0.3754, -0.211233}
                                        -6
 Displacement Residual     : 1.95293 10
****
 Contact name              : DpCo
  Max Normal Load          : 17.4168
  Max Normal Stress        : -215199.
  Displacement             : 0.000108847
  Contact a-length         : 0.0179964
  Contact b-length         : 0.00218837
  Contact area             : 0.000123725
  Distance to Corner       : -0.00144192
  Effective Speed Factor   : 2.659
  Load-Life Factor         : 12.2135
                                       7
  Expected Average Life    : 8.45563 10
****
 Contact name              : DiCi
  Max Normal Load          : 14.6735
  Max Normal Stress        : -200430.
  Displacement             : 0.0000944153
  Contact a-length         : 0.016761
  Contact b-length         : 0.00203806
  Contact area             : 0.000107316
  Distance to Corner: Dp   : 0.00948905
  Distance to Corner: Ds   : 0.00948905
  Effective Speed Factor   : 2.659
  Load-Life Factor         : 14.4969
                                       8
  Expected Average Life    : 1.67837 10
****
 Contact name              : DsCi
  Max Normal Load          : 22.2722
  Max Normal Stress        : -232000.
  Displacement             : 0.000126487
  Contact a-length         : 0.0194
  Contact b-length         : 0.00235877
  Contact area             : 0.00014376
  Distance to Corner       : -0.00284544
  Effective Speed Factor   : 2.659
  Load-Life Factor         : 9.55091
                                       7
  Expected Average Life    : 3.162 10
```

```
==========================
 Ball number          : 9
 Ball angle           : 270.
 Ball position        : {-2.38153, 0.208357, 0.}
 Solution current?    : Yes
 Ball activity        : ON
 Ball request         : solve
 Cross over angle         : 40.7758
 Residual Force Vector    : {-0.294003, 0.317216, -0.210878}
                                        -6
 Displacement Residual    : 1.9137 10
****
 Contact name             : DpCo
  Max Normal Load         : 17.349
  Max Normal Stress       : -214909.
  Displacement            : 0.000108554
  Contact a-length        : 0.0179722
  Contact b-length        : 0.00218541
  Contact area            : 0.000123391
  Distance to Corner      : -0.00141766
  Effective Speed Factor  : 2.659
  Load-Life Factor        : 12.2612
                                      7
  Expected Average Life   : 8.58845 10
****
 Contact name             : DiCi
  Max Normal Load         : 14.6566
  Max Normal Stress       : -200396.
  Displacement            : 0.0000943835
  Contact a-length        : 0.0167581
  Contact b-length        : 0.00203772
  Contact area            : 0.00010728
  Distance to Corner: Dp  : 0.00949187
  Distance to Corner: Ds  : 0.00949187
  Effective Speed Factor  : 2.659
  Load-Life Factor        : 14.5136
                                      8
  Expected Average Life   : 1.68611 10
****
 Contact name             : DsCi
  Max Normal Load         : 22.2171
  Max Normal Stress       : -231797.
  Displacement            : 0.000126266
  Contact a-length        : 0.019383
  Contact b-length        : 0.00235671
  Contact area            : 0.000143508
  Distance to Corner      : -0.00282848
  Effective Speed Factor  : 2.659
  Load-Life Factor        : 9.57462
                                      7
  Expected Average Life   : 3.19352 10
```

```
=========================
 Ball number          : 10
 Ball angle           : 260.
 Ball position        : {-2.36942, -0.207298, 0.}
 Solution current?    : Yes
 Ball activity        : ON
 Ball request         : solve
 Cross over angle          : 40.8842
 Residual Force Vector     : {-0.34088, 0.250012, -0.210457}
                                        -6
 Displacement Residual     : 1.8745 10
****
 Contact name              : DpCo
  Max Normal Load          : 17.2811
  Max Normal Stress        : -214617.
  Displacement             : 0.000108259
  Contact a-length         : 0.0179478
  Contact b-length         : 0.00218245
  Contact area             : 0.000123056
  Distance to Corner       : -0.00139325
  Effective Speed Factor   : 2.659
  Load-Life Factor         : 12.3094
                                      7
  Expected Average Life    : 8.72424 10
****
 Contact name              : DiCi
  Max Normal Load          : 14.6395
  Max Normal Stress        : -200361.
  Displacement             : 0.0000943506
  Contact a-length         : 0.0167552
  Contact b-length         : 0.00203736
  Contact area             : 0.000107243
  Distance to Corner: Dp   : 0.00949479
  Distance to Corner: Ds   : 0.00949479
  Effective Speed Factor   : 2.659
  Load-Life Factor         : 14.5306
                                    8
  Expected Average Life    : 1.694 10
****
 Contact name              : DsCi
  Max Normal Load          : 22.1616
  Max Normal Stress        : -231593.
  Displacement             : 0.000126043
  Contact a-length         : 0.0193659
  Contact b-length         : 0.00235464
  Contact area             : 0.000143256
  Distance to Corner       : -0.00281141
  Effective Speed Factor   : 2.659
  Load-Life Factor         : 9.59858
                                      7
  Expected Average Life    : 3.2256 10
```

```
=========================
 Ball number          : 11
 Ball angle           : 250.
 Ball position        : {-2.28569, -0.612449, 0.}
 Solution current?    : Yes
 Ball activity        : ON
 Ball request         : solve
 Cross over angle         : 40.993
 Residual Force Vector    : {-0.373393, 0.176581, -0.209969}
                                      -6
 Displacement Residual    : 1.83533 10
****
 Contact name             : DpCo
  Max Normal Load         : 17.2131
  Max Normal Stress       : -214323.
  Displacement            : 0.000107963
  Contact a-length        : 0.0179232
  Contact b-length        : 0.00217946
  Contact area            : 0.00012272
  Distance to Corner      : -0.00136869
  Effective Speed Factor  : 2.659
  Load-Life Factor        : 12.3581
                                    7
  Expected Average Life   : 8.86308 10
****
 Contact name             : DiCi
  Max Normal Load         : 14.6222
  Max Normal Stress       : -200325.
  Displacement            : 0.0000943165
  Contact a-length        : 0.0167522
  Contact b-length        : 0.002037
  Contact area            : 0.000107204
  Distance to Corner: Dp  : 0.00949782
  Distance to Corner: Ds  : 0.00949782
  Effective Speed Factor  : 2.659
  Load-Life Factor        : 14.5478
                                    8
  Expected Average Life   : 1.70204 10
****
 Contact name             : DsCi
  Max Normal Load         : 22.1059
  Max Normal Stress       : -231387.
  Displacement            : 0.00012582
  Contact a-length        : 0.0193487
  Contact b-length        : 0.00235255
  Contact area            : 0.000143002
  Distance to Corner      : -0.00279423
  Effective Speed Factor  : 2.659
  Load-Life Factor        : 9.62279
                                    7
  Expected Average Life   : 3.25828 10
```

```
=========================
 Ball number          : 12
 Ball angle           : 240.
 Ball position        : {-2.1336, -0.994914, 0.}
 Solution current?    : Yes
 Ball activity        : ON
 Ball request         : solve
 Cross over angle          : 41.1023
 Residual Force Vector     : {-0.390877, 0.099856, -0.209414}
                                                  -6
 Displacement Residual     : 1.79621 10
****
 Contact name              : DpCo
  Max Normal Load          : 17.1448
  Max Normal Stress        : -214028.
  Displacement             : 0.000107666
  Contact a-length         : 0.0178985
  Contact b-length         : 0.00217646
  Contact area             : 0.000122382
  Distance to Corner       : -0.00134399
  Effective Speed Factor   : 2.659
  Load-Life Factor         : 12.4072
                                        7
  Expected Average Life    : 9.00504 10
****
 Contact name              : DiCi
  Max Normal Load          : 14.6046
  Max Normal Stress        : -200288.
  Displacement             : 0.0000942813
  Contact a-length         : 0.0167491
  Contact b-length         : 0.00203662
  Contact area             : 0.000107164
  Distance to Corner: Dp   : 0.00950094
  Distance to Corner: Ds   : 0.00950094
  Effective Speed Factor   : 2.659
  Load-Life Factor         : 14.5653
                                        8
  Expected Average Life    : 1.71025 10
****
 Contact name              : DsCi
  Max Normal Load          : 22.0498
  Max Normal Stress        : -231180.
  Displacement             : 0.000125595
  Contact a-length         : 0.0193315
  Contact b-length         : 0.00235045
  Contact area             : 0.000142746
  Distance to Corner       : -0.00277695
  Effective Speed Factor   : 2.659
  Load-Life Factor         : 9.64726
                                        7
  Expected Average Life    : 3.29155 10
```

```
=========================
 Ball number          : 13
 Ball angle           : 230.
 Ball position        : {-1.91847, -1.34332, 0.}
 Solution current?    : Yes
 Ball activity        : ON
 Ball request         : solve
 Cross over angle          : 41.2121
 Residual Force Vector     : {-0.393246, 0.0227972, -0.20879}
                                          -6
 Displacement Residual     : 1.75713 10
****
 Contact name              : DpCo
  Max Normal Load          : 17.0764
  Max Normal Stress        : -213731.
  Displacement             : 0.000107367
  Contact a-length         : 0.0178736
  Contact b-length         : 0.00217343
  Contact area             : 0.000122042
  Distance to Corner       : -0.00131914
  Effective Speed Factor   : 2.659
  Load-Life Factor         : 12.457
                                        7
  Expected Average Life    : 9.15021 10
****
 Contact name              : DiCi
  Max Normal Load          : 14.5868
  Max Normal Stress        : -200249.
  Displacement             : 0.0000942449
  Contact a-length         : 0.0167458
  Contact b-length         : 0.00203622
  Contact area             : 0.000107123
  Distance to Corner: Dp   : 0.00950418
  Distance to Corner: Ds   : 0.00950418
  Effective Speed Factor   : 2.659
  Load-Life Factor         : 14.5831
                                        8
  Expected Average Life    : 1.71862 10
****
 Contact name              : DsCi
  Max Normal Load          : 21.9934
  Max Normal Stress        : -230972.
  Displacement             : 0.000125369
  Contact a-length         : 0.0193141
  Contact b-length         : 0.00234833
  Contact area             : 0.00014249
  Distance to Corner       : -0.00275955
  Effective Speed Factor   : 2.659
  Load-Life Factor         : 9.672
                                        7
  Expected Average Life    : 3.32543 10
```

```
=========================
 Ball number          : 14
 Ball angle           : 220.
 Ball position        : {-1.64746, -1.64746, 0.}
 Solution current?    : Yes
 Ball activity        : ON
 Ball request         : solve
 Cross over angle          : 41.3223
 Residual Force Vector     : {-0.38098, -0.0517156, -0.208097}
                                          -6
 Displacement Residual     : 1.71809 10
****
 Contact name              : DpCo
  Max Normal Load          : 17.0078
  Max Normal Stress        : -213432.
  Displacement             : 0.000107067
  Contact a-length         : 0.0178486
  Contact b-length         : 0.00217039
  Contact area             : 0.000121701
  Distance to Corner       : -0.00129413
  Effective Speed Factor   : 2.659
  Load-Life Factor         : 12.5072
                                        7
  Expected Average Life    : 9.29869 10
****
 Contact name              : DiCi
  Max Normal Load          : 14.5687
  Max Normal Stress        : -200209.
  Displacement             : 0.0000942073
  Contact a-length         : 0.0167425
  Contact b-length         : 0.00203582
  Contact area             : 0.00010708
  Distance to Corner: Dp   : 0.00950751
  Distance to Corner: Ds   : 0.00950751
  Effective Speed Factor   : 2.659
  Load-Life Factor         : 14.6011
                                        8
  Expected Average Life    : 1.72715 10
****
 Contact name              : DsCi
  Max Normal Load          : 21.9367
  Max Normal Stress        : -230763.
  Displacement             : 0.000125142
  Contact a-length         : 0.0192966
  Contact b-length         : 0.0023462
  Contact area             : 0.000142231
  Distance to Corner       : -0.00274205
  Effective Speed Factor   : 2.659
  Load-Life Factor         : 9.697
                                        7
  Expected Average Life    : 3.35995 10
```

```
==========================
 Ball number          : 15
 Ball angle           : 210.
 Ball position        : {-1.32938, -1.89856, 0.}
 Solution current?    : Yes
 Ball activity        : ON
 Ball request         : solve
 Cross over angle          : 41.4329
 Residual Force Vector     : {-0.355091, -0.120991, -0.207333}
                                          -6
 Displacement Residual     : 1.6791 10
****
 Contact name              : DpCo
  Max Normal Load          : 16.9391
  Max Normal Stress        : -213131.
  Displacement             : 0.000106765
  Contact a-length         : 0.0178235
  Contact b-length         : 0.00216733
  Contact area             : 0.000121358
  Distance to Corner       : -0.00126898
  Effective Speed Factor   : 2.659
  Load-Life Factor         : 12.5579
                                        7
  Expected Average Life    : 9.45055 10
****
 Contact name              : DiCi
  Max Normal Load          : 14.5504
  Max Normal Stress        : -200168.
  Displacement             : 0.0000941686
  Contact a-length         : 0.016739
  Contact b-length         : 0.0020354
  Contact area             : 0.000107036
  Distance to Corner: Dp   : 0.00951096
  Distance to Corner: Ds   : 0.00951096
  Effective Speed Factor   : 2.659
  Load-Life Factor         : 14.6195
                                        8
  Expected Average Life    : 1.73586 10
****
 Contact name              : DsCi
  Max Normal Load          : 21.8797
  Max Normal Stress        : -230553.
  Displacement             : 0.000124914
  Contact a-length         : 0.019279
  Contact b-length         : 0.00234406
  Contact area             : 0.000141972
  Distance to Corner       : -0.00272444
  Effective Speed Factor   : 2.659
  Load-Life Factor         : 9.72227
                                        7
  Expected Average Life    : 3.39511 10
```

```
==========================
 Ball number          : 16
 Ball angle           : 200.
 Ball position        : {-0.97437, -2.08954, 0.}
 Solution current?    : Yes
 Ball activity        : ON
 Ball request         : solve
 Cross over angle          : 41.544
 Residual Force Vector     : {-0.317071, -0.182622, -0.206498}
                                          -6
 Displacement Residual     : 1.64017 10
****
 Contact name              : DpCo
  Max Normal Load          : 16.8702
  Max Normal Stress        : -212829.
  Displacement             : 0.000106463
  Contact a-length         : 0.0177982
  Contact b-length         : 0.00216426
  Contact area             : 0.000121014
  Distance to Corner       : -0.00124368
  Effective Speed Factor   : 2.659
  Load-Life Factor         : 12.6092
                                        7
  Expected Average Life    : 9.6059 10
****
 Contact name              : DiCi
  Max Normal Load          : 14.5319
  Max Normal Stress        : -200125.
  Displacement             : 0.0000941286
  Contact a-length         : 0.0167355
  Contact b-length         : 0.00203497
  Contact area             : 0.000106991
  Distance to Corner: Dp   : 0.00951451
  Distance to Corner: Ds   : 0.00951451
  Effective Speed Factor   : 2.659
  Load-Life Factor         : 14.6381
                                        8
  Expected Average Life    : 1.74473 10
****
 Contact name              : DsCi
  Max Normal Load          : 21.8223
  Max Normal Stress        : -230341.
  Displacement             : 0.000124684
  Contact a-length         : 0.0192612
  Contact b-length         : 0.00234191
  Contact area             : 0.000141711
  Distance to Corner       : -0.00270672
  Effective Speed Factor   : 2.659
  Load-Life Factor         : 9.74781
                                        7
  Expected Average Life    : 3.43093 10
```

```
=========================
 Ball number          : 17
 Ball angle           : 190.
 Ball position        : {-0.593576, -2.21526, 0.}
 Solution current?    : Yes
 Ball activity        : ON
 Ball request         : solve
 Cross over angle          : 41.6555
 Residual Force Vector     : {-0.268824, -0.234565, -0.20559}
                                      -6
 Displacement Residual     : 1.6013 10
****
 Contact name              : DpCo
  Max Normal Load          : 16.8011
  Max Normal Stress        : -212524.
  Displacement             : 0.000106158
  Contact a-length         : 0.0177727
  Contact b-length         : 0.00216116
  Contact area             : 0.000120668
  Distance to Corner       : -0.00121822
  Effective Speed Factor   : 2.659
  Load-Life Factor         : 12.6611
                                       7
  Expected Average Life    : 9.76483 10
****
 Contact name              : DiCi
  Max Normal Load          : 14.5131
  Max Normal Stress        : -200082.
  Displacement             : 0.0000940875
  Contact a-length         : 0.0167318
  Contact b-length         : 0.00203452
  Contact area             : 0.000106944
  Distance to Corner: Dp   : 0.00951817
  Distance to Corner: Ds   : 0.00951817
  Effective Speed Factor   : 2.659
  Load-Life Factor         : 14.6571
                                       8
  Expected Average Life    : 1.75378 10
****
 Contact name              : DsCi
  Max Normal Load          : 21.7647
  Max Normal Stress        : -230127.
  Displacement             : 0.000124454
  Contact a-length         : 0.0192434
  Contact b-length         : 0.00233974
  Contact area             : 0.000141449
  Distance to Corner       : -0.0026889
  Effective Speed Factor   : 2.659
  Load-Life Factor         : 9.77363
                                       7
  Expected Average Life    : 3.46742 10
```

```
=========================
 Ball number          : 18
 Ball angle           : 180.
 Ball position        : {-0.198824, -2.27257, 0.}
 Solution current?    : Yes
 Ball activity        : ON
 Ball request         : solve
 Cross over angle          : 34.0325
 Residual Force Vector     : {-1.89269, 0.870011, -0.533329}
                                          -6
 Displacement Residual     : 9.90138 10
****
 Contact name              : DpCi
  Max Normal Load          : 17.4021
  Max Normal Stress        : -218534.
  Displacement             : 0.000112237
  Contact a-length         : 0.0182745
  Contact b-length         : 0.00222203
  Contact area             : 0.000127569
  Distance to Corner       : -0.00172
  Effective Speed Factor   : 2.659
  Load-Life Factor         : 12.2238
                                        7
  Expected Average Life    : 8.48421 10
****
 Contact name              : DiCi
  Max Normal Load          : 14.8595
  Max Normal Stress        : -194075.
  Displacement             : 0.0000885233
  Contact a-length         : 0.0162295
  Contact b-length         : 0.00197345
  Contact area             : 0.000100619
  Distance to Corner: Dp   : 0.0100205
  Distance to Corner: Ds   : 0.0100205
  Effective Speed Factor   : 2.659
  Load-Life Factor         : 14.3154
                                        8
  Expected Average Life    : 1.59587 10
****
 Contact name              : DsCo
  Max Normal Load          : 23.4209
  Max Normal Stress        : -236694.
  Displacement             : 0.000131686
  Contact a-length         : 0.0197946
  Contact b-length         : 0.00240712
  Contact area             : 0.00014969
  Distance to Corner       : -0.00324007
  Effective Speed Factor   : 2.659
  Load-Life Factor         : 9.08247
                                        7
  Expected Average Life    : 2.58583 10
```

```
=========================
 Ball number          : 19
 Ball angle           : 170.
 Ball position        : {0.199883, -2.28468, 0.}
 Solution current?    : Yes
 Ball activity        : ON
 Ball request         : solve
 Cross over angle          : 33.919
 Residual Force Vector     : {-2.03449, 0.51747, -0.526311}
                                          -6
 Displacement Residual     : 9.9469 10
****
 Contact name              : DpCi
  Max Normal Load          : 17.4859
  Max Normal Stress        : -218851.
  Displacement             : 0.000112562
  Contact a-length         : 0.018301
  Contact b-length         : 0.00222525
  Contact area             : 0.000127939
  Distance to Corner       : -0.00174647
  Effective Speed Factor   : 2.659
  Load-Life Factor         : 12.1652
                                        7
  Expected Average Life    : 8.32274 10
****
 Contact name              : DiCi
  Max Normal Load          : 14.8746
  Max Normal Stress        : -194076.
  Displacement             : 0.0000885238
  Contact a-length         : 0.0162296
  Contact b-length         : 0.00197345
  Contact area             : 0.00010062
  Distance to Corner: Dp   : 0.0100204
  Distance to Corner: Ds   : 0.0100204
  Effective Speed Factor   : 2.659
  Load-Life Factor         : 14.3009
                                        8
  Expected Average Life    : 1.58943 10
****
 Contact name              : DsCo
  Max Normal Load          : 23.4788
  Max Normal Stress        : -236917.
  Displacement             : 0.000131934
  Contact a-length         : 0.0198132
  Contact b-length         : 0.00240938
  Contact area             : 0.000149972
  Distance to Corner       : -0.00325869
  Effective Speed Factor   : 2.659
  Load-Life Factor         : 9.06007
                                        7
  Expected Average Life    : 2.56042 10
```

```
==========================
 Ball number          : 20
 Ball angle           : 160.
 Ball position        : {0.596722, -2.227, 0.}
 Solution current?    : Yes
 Ball activity        : ON
 Ball request         : solve
 Cross over angle          : 33.8059
 Residual Force Vector     : {-2.1106, 0.142446, -0.519291}
                                                  -6
 Displacement Residual     : 9.99216 10
****
 Contact name              : DpCi
  Max Normal Load          : 17.5695
  Max Normal Stress        : -219165.
  Displacement             : 0.000112886
  Contact a-length         : 0.0183273
  Contact b-length         : 0.00222845
  Contact area             : 0.000128307
  Distance to Corner       : -0.00177277
  Effective Speed Factor   : 2.659
  Load-Life Factor         : 12.1074
                                        7
  Expected Average Life    : 8.16548 10
****
 Contact name              : DiCi
  Max Normal Load          : 14.8892
  Max Normal Stress        : -194075.
  Displacement             : 0.0000885231
  Contact a-length         : 0.0162295
  Contact b-length         : 0.00197344
  Contact area             : 0.000100619
  Distance to Corner: Dp   : 0.0100205
  Distance to Corner: Ds   : 0.0100205
  Effective Speed Factor   : 2.659
  Load-Life Factor         : 14.2869
                                        8
  Expected Average Life    : 1.58318 10
****
 Contact name              : DsCo
  Max Normal Load          : 23.5365
  Max Normal Stress        : -237138.
  Displacement             : 0.00013218
  Contact a-length         : 0.0198317
  Contact b-length         : 0.00241163
  Contact area             : 0.000150252
  Distance to Corner       : -0.00327718
  Effective Speed Factor   : 2.659
  Load-Life Factor         : 9.03789
                                        7
  Expected Average Life    : 2.53543 10
```

```
=========================
 Ball number          : 21
 Ball angle           : 150.
 Ball position        : {0.979506, -2.10056, 0.}
 Solution current?    : Yes
 Ball activity        : ON
 Ball request         : solve
 Cross over angle          : 33.6933
 Residual Force Vector     : {-0.0341258, -0.0259138, 0.0079104}
                                                  -7
 Displacement Residual     : 1.49594 10
****
 Contact name              : DpCi
  Max Normal Load          : 18.8273
  Max Normal Stress        : -219496.
  Displacement             : 0.000113227
  Contact a-length         : 0.0183549
  Contact b-length         : 0.00223181
  Contact area             : 0.000128695
  Distance to Corner       : -0.00180044
  Effective Speed Factor   : 2.659
  Load-Life Factor         : 11.2985
                                        7
  Expected Average Life    : 6.19248 10
****
 Contact name              : DiCi
  Max Normal Load          : 13.018
  Max Normal Stress        : -193913.
  Displacement             : 0.0000883751
  Contact a-length         : 0.016216
  Contact b-length         : 0.00197179
  Contact area             : 0.000100451
  Distance to Corner: Dp   : 0.010034
  Distance to Corner: Ds   : 0.010034
  Effective Speed Factor   : 2.659
  Load-Life Factor         : 16.3405
                                        8
  Expected Average Life    : 2.70919 10
****
 Contact name              : DsCo
  Max Normal Load          : 23.8197
  Max Normal Stress        : -237416.
  Displacement             : 0.00013249
  Contact a-length         : 0.0198549
  Contact b-length         : 0.00241446
  Contact area             : 0.000150605
  Distance to Corner       : -0.00330044
  Effective Speed Factor   : 2.659
  Load-Life Factor         : 8.9304
                                        7
  Expected Average Life    : 2.41695 10
```

```
=========================
 Ball number          : 22
 Ball angle           : 140.
 Ball position        : {1.33635, -1.90851, 0.}
 Solution current?    : Yes
 Ball activity        : ON
 Ball request         : solve
 Cross over angle          : 33.5812
 Residual Force Vector     : {-0.0296393, -0.0317288, 0.00783508}
                                        -7
 Displacement Residual     : 1.52383 10
****
 Contact name              : DpCi
  Max Normal Load          : 18.9074
  Max Normal Stress        : -219808.
  Displacement             : 0.000113549
  Contact a-length         : 0.018381
  Contact b-length         : 0.00223498
  Contact area             : 0.00012906
  Distance to Corner       : -0.0018265
  Effective Speed Factor   : 2.659
  Load-Life Factor         : 11.2506
                                       7
  Expected Average Life    : 6.08827 10
****
 Contact name              : DiCi
  Max Normal Load          : 13.0173
  Max Normal Stress        : -193906.
  Displacement             : 0.0000883692
  Contact a-length         : 0.0162154
  Contact b-length         : 0.00197173
  Contact area             : 0.000100444
  Distance to Corner: Dp   : 0.0100346
  Distance to Corner: Ds   : 0.0100346
  Effective Speed Factor   : 2.659
  Load-Life Factor         : 16.3414
                                       8
  Expected Average Life    : 2.7098 10
****
 Contact name              : DsCo
  Max Normal Load          : 23.8855
  Max Normal Stress        : -237635.
  Displacement             : 0.000132734
  Contact a-length         : 0.0198732
  Contact b-length         : 0.00241668
  Contact area             : 0.000150882
  Distance to Corner       : -0.00331871
  Effective Speed Factor   : 2.659
  Load-Life Factor         : 8.90582
                                       7
  Expected Average Life    : 2.39045 10
```

```
=========================
 Ball number          : 23
 Ball angle           : 130.
 Ball position        : {1.65605, -1.65605, 0.}
 Solution current?    : Yes
 Ball activity        : ON
 Ball request         : solve
 Cross over angle          : 33.4696
 Residual Force Vector     : {-0.024154, -0.0367644, 0.00775943}
                                                  -7
 Displacement Residual     : 1.55177 10
****
 Contact name              : DpCi
  Max Normal Load          : 18.9871
  Max Normal Stress        : -220117.
  Displacement             : 0.000113869
  Contact a-length         : 0.0184069
  Contact b-length         : 0.00223813
  Contact area             : 0.000129424
  Distance to Corner       : -0.00185239
  Effective Speed Factor   : 2.659
  Load-Life Factor         : 11.2034
                                        7
  Expected Average Life    : 5.98658 10
****
 Contact name              : DiCi
  Max Normal Load          : 13.0163
  Max Normal Stress        : -193899.
  Displacement             : 0.0000883621
  Contact a-length         : 0.0162148
  Contact b-length         : 0.00197165
  Contact area             : 0.000100436
  Distance to Corner: Dp   : 0.0100352
  Distance to Corner: Ds   : 0.0100352
  Effective Speed Factor   : 2.659
  Load-Life Factor         : 16.3426
                                        8
  Expected Average Life    : 2.71063 10
****
 Contact name              : DsCo
  Max Normal Load          : 23.951
  Max Normal Stress        : -237852.
  Displacement             : 0.000132977
  Contact a-length         : 0.0198914
  Contact b-length         : 0.00241889
  Contact area             : 0.000151158
  Distance to Corner       : -0.00333687
  Effective Speed Factor   : 2.659
  Load-Life Factor         : 8.88148
                                        7
  Expected Average Life    : 2.36443 10
```

```
=========================
 Ball number          : 24
 Ball angle           : 120.
 Ball position        : {1.92842, -1.35029, 0.}
 Solution current?    : Yes
 Ball activity        : ON
 Ball request         : solve
 Cross over angle          : 33.3584
 Residual Force Vector     : {-0.0178059, -0.0408475, 0.00768347}
                                                  -7
 Displacement Residual     : 1.57978 10
****
 Contact name              : DpCi
  Max Normal Load          : 19.0666
  Max Normal Stress        : -220425.
  Displacement             : 0.000114188
  Contact a-length         : 0.0184326
  Contact b-length         : 0.00224126
  Contact area             : 0.000129786
  Distance to Corner       : -0.00187812
  Effective Speed Factor   : 2.659
  Load-Life Factor         : 11.1567
                                        7
  Expected Average Life    : 5.88735 10
****
 Contact name              : DiCi
  Max Normal Load          : 13.015
  Max Normal Stress        : -193889.
  Displacement             : 0.0000883537
  Contact a-length         : 0.016214
  Contact b-length         : 0.00197156
  Contact area             : 0.000100427
  Distance to Corner: Dp   : 0.010036
  Distance to Corner: Ds   : 0.010036
  Effective Speed Factor   : 2.659
  Load-Life Factor         : 16.3442
                                        8
  Expected Average Life    : 2.71169 10
****
 Contact name              : DsCo
  Max Normal Load          : 24.0161
  Max Normal Stress        : -238067.
  Displacement             : 0.000133218
  Contact a-length         : 0.0199094
  Contact b-length         : 0.00242109
  Contact area             : 0.000151432
  Distance to Corner       : -0.0033549
  Effective Speed Factor   : 2.659
  Load-Life Factor         : 8.8574
                                        7
  Expected Average Life    : 2.33888 10
```

```
=========================
 Ball number          : 25
 Ball angle           : 110.
 Ball position        : {2.14461, -1.00005, 0.}
 Solution current?    : Yes
 Ball activity        : ON
 Ball request         : solve
 Cross over angle          : 33.2476
 Residual Force Vector     : {-0.0107614, -0.0438293, 0.00760722}
                                                  -7
 Displacement Residual     : 1.60783 10
****
 Contact name              : DpCi
  Max Normal Load          : 19.1459
  Max Normal Stress        : -220731.
  Displacement             : 0.000114505
  Contact a-length         : 0.0184582
  Contact b-length         : 0.00224437
  Contact area             : 0.000130147
  Distance to Corner       : -0.00190369
  Effective Speed Factor   : 2.659
  Load-Life Factor         : 11.1105
                                       7
  Expected Average Life    : 5.7905 10
****
 Contact name              : DiCi
  Max Normal Load          : 13.0135
  Max Normal Stress        : -193879.
  Displacement             : 0.0000883442
  Contact a-length         : 0.0162131
  Contact b-length         : 0.00197145
  Contact area             : 0.000100416
  Distance to Corner: Dp   : 0.0100369
  Distance to Corner: Ds   : 0.0100369
  Effective Speed Factor   : 2.659
  Load-Life Factor         : 16.3462
                                       8
  Expected Average Life    : 2.71298 10
****
 Contact name              : DsCo
  Max Normal Load          : 24.0809
  Max Normal Stress        : -238281.
  Displacement             : 0.000133458
  Contact a-length         : 0.0199273
  Contact b-length         : 0.00242326
  Contact area             : 0.000151705
  Distance to Corner       : -0.00337281
  Effective Speed Factor   : 2.659
  Load-Life Factor         : 8.83355
                                       7
  Expected Average Life    : 2.3138 10
```

```
=========================
 Ball number          : 26
 Ball angle           : 100.
 Ball position        : {2.29743, -0.615594, 0.}
 Solution current?    : Yes
 Ball activity        : ON
 Ball request         : solve
 Cross over angle          : 33.1374
 Residual Force Vector     : {-0.00321263, -0.0455899, 0.00753071}
                                          -7
 Displacement Residual     : 1.63593 10
****
 Contact name              : DpCi
  Max Normal Load          : 19.2248
  Max Normal Stress        : -221035.
  Displacement             : 0.00011482
  Contact a-length         : 0.0184836
  Contact b-length         : 0.00224746
  Contact area             : 0.000130505
  Distance to Corner       : -0.0019291
  Effective Speed Factor   : 2.659
  Load-Life Factor         : 11.0649
                                        7
  Expected Average Life    : 5.69597 10
****
 Contact name              : DiCi
  Max Normal Load          : 13.0116
  Max Normal Stress        : -193867.
  Displacement             : 0.0000883333
  Contact a-length         : 0.0162121
  Contact b-length         : 0.00197133
  Contact area             : 0.000100403
  Distance to Corner: Dp   : 0.0100379
  Distance to Corner: Ds   : 0.0100379
  Effective Speed Factor   : 2.659
  Load-Life Factor         : 16.3484
                                        8
  Expected Average Life    : 2.71449 10
****
 Contact name              : DsCo
  Max Normal Load          : 24.1454
  Max Normal Stress        : -238494.
  Displacement             : 0.000133696
  Contact a-length         : 0.0199451
  Contact b-length         : 0.00242543
  Contact area             : 0.000151976
  Distance to Corner       : -0.00339061
  Effective Speed Factor   : 2.659
  Load-Life Factor         : 8.80995
                                        7
  Expected Average Life    : 2.28917 10
```

```
=========================
 Ball number          : 27
 Ball angle           : 90.
 Ball position        : {2.38153, -0.208357, 0.}
 Solution current?    : Yes
 Ball activity        : ON
 Ball request         : solve
 Cross over angle          : 33.0275
 Residual Force Vector     : {0.00462752, -0.0460432, 0.00745395}
                                                  -7
 Displacement Residual     : 1.66407 10
****
 Contact name              : DpCi
  Max Normal Load          : 19.3035
  Max Normal Stress        : -221337.
  Displacement             : 0.000115134
  Contact a-length         : 0.0185089
  Contact b-length         : 0.00225053
  Contact area             : 0.000130862
  Distance to Corner       : -0.00195435
  Effective Speed Factor   : 2.659
  Load-Life Factor         : 11.0198
                                       7
  Expected Average Life    : 5.60369 10
****
 Contact name              : DiCi
  Max Normal Load          : 13.0096
  Max Normal Stress        : -193854.
  Displacement             : 0.0000883213
  Contact a-length         : 0.016211
  Contact b-length         : 0.00197119
  Contact area             : 0.00010039
  Distance to Corner: Dp   : 0.010039
  Distance to Corner: Ds   : 0.010039
  Effective Speed Factor   : 2.659
  Load-Life Factor         : 16.351
                                       8
  Expected Average Life    : 2.71622 10
****
 Contact name              : DsCo
  Max Normal Load          : 24.2096
  Max Normal Stress        : -238706.
  Displacement             : 0.000133933
  Contact a-length         : 0.0199628
  Contact b-length         : 0.00242758
  Contact area             : 0.000152245
  Distance to Corner       : -0.00340828
  Effective Speed Factor   : 2.659
  Load-Life Factor         : 8.78659
                                       7
  Expected Average Life    : 2.26499 10
```

```
==========================
 Ball number          : 28
 Ball angle           : 80.
 Ball position        : {2.39363, 0.209416, 0.}
 Solution current?    : Yes
 Ball activity        : ON
 Ball request         : solve
 Cross over angle          : 32.9182
 Residual Force Vector     : {0.0125313, -0.0451405, 0.00737698}
                                                  -7
 Displacement Residual     : 1.69224 10
****
 Contact name              : DpCi
  Max Normal Load          : 19.3819
  Max Normal Stress        : -221637.
  Displacement             : 0.000115446
  Contact a-length         : 0.018534
  Contact b-length         : 0.00225358
  Contact area             : 0.000131217
  Distance to Corner       : -0.00197945
  Effective Speed Factor   : 2.659
  Load-Life Factor         : 10.9752
                                        7
  Expected Average Life    : 5.51359 10
****
 Contact name              : DiCi
  Max Normal Load          : 13.0072
  Max Normal Stress        : -193839.
  Displacement             : 0.0000883081
  Contact a-length         : 0.0162098
  Contact b-length         : 0.00197105
  Contact area             : 0.000100375
  Distance to Corner: Dp   : 0.0100402
  Distance to Corner: Ds   : 0.0100402
  Effective Speed Factor   : 2.659
  Load-Life Factor         : 16.354
                                        8
  Expected Average Life    : 2.71817 10
****
 Contact name              : DsCo
  Max Normal Load          : 24.2735
  Max Normal Stress        : -238916.
  Displacement             : 0.000134169
  Contact a-length         : 0.0199804
  Contact b-length         : 0.00242971
  Contact area             : 0.000152513
  Distance to Corner       : -0.00342584
  Effective Speed Factor   : 2.659
  Load-Life Factor         : 8.76347
                                        7
  Expected Average Life    : 2.24124 10
```

```
=========================
 Ball number          : 29
 Ball angle           : 70.
 Ball position        : {2.33264, 0.62503, 0.}
 Solution current?    : Yes
 Ball activity        : ON
 Ball request         : solve
 Cross over angle          : 32.8093
 Residual Force Vector     : {0.0202627, -0.0428731, 0.0072998}
                                          -7
 Displacement Residual     : 1.72044 10
****
 Contact name              : DpCi
  Max Normal Load          : 19.46
  Max Normal Stress        : -221935.
  Displacement             : 0.000115757
  Contact a-length         : 0.0185589
  Contact b-length         : 0.00225661
  Contact area             : 0.00013157
  Distance to Corner       : -0.00200438
  Effective Speed Factor   : 2.659
  Load-Life Factor         : 10.9312
                                        7
  Expected Average Life    : 5.4256 10
****
 Contact name              : DiCi
  Max Normal Load          : 13.0046
  Max Normal Stress        : -193824.
  Displacement             : 0.0000882938
  Contact a-length         : 0.0162085
  Contact b-length         : 0.00197089
  Contact area             : 0.000100358
  Distance to Corner: Dp   : 0.0100415
  Distance to Corner: Ds   : 0.0100415
  Effective Speed Factor   : 2.659
  Load-Life Factor         : 16.3572
                                        8
  Expected Average Life    : 2.72034 10
****
 Contact name              : DsCo
  Max Normal Load          : 24.3371
  Max Normal Stress        : -239124.
  Displacement             : 0.000134403
  Contact a-length         : 0.0199978
  Contact b-length         : 0.00243183
  Contact area             : 0.00015278
  Distance to Corner       : -0.00344329
  Effective Speed Factor   : 2.659
  Load-Life Factor         : 8.74058
                                        7
  Expected Average Life    : 2.21791 10
```

```
==========================
 Ball number          : 30
 Ball angle           : 60.
 Ball position        : {2.19968, 1.02573, 0.}
 Solution current?    : Yes
 Ball activity        : ON
 Ball request         : solve
 Cross over angle          : 32.7009
 Residual Force Vector     : {0.0275847, -0.0392735, 0.00722245}
                                                  -7
 Displacement Residual     : 1.74866 10
****
 Contact name              : DpCi
  Max Normal Load          : 19.5378
  Max Normal Stress        : -222231.
  Displacement             : 0.000116067
  Contact a-length         : 0.0185837
  Contact b-length         : 0.00225962
  Contact area             : 0.000131922
  Distance to Corner       : -0.00202916
  Effective Speed Factor   : 2.659
  Load-Life Factor         : 10.8876
                                        7
  Expected Average Life    : 5.33968 10
****
 Contact name              : DiCi
  Max Normal Load          : 13.0018
  Max Normal Stress        : -193807.
  Displacement             : 0.0000882782
  Contact a-length         : 0.0162071
  Contact b-length         : 0.00197071
  Contact area             : 0.000100341
  Distance to Corner: Dp   : 0.0100429
  Distance to Corner: Ds   : 0.0100429
  Effective Speed Factor   : 2.659
  Load-Life Factor         : 16.3608
                                       8
  Expected Average Life    : 2.72273 10
****
 Contact name              : DsCo
  Max Normal Load          : 24.4003
  Max Normal Stress        : -239331.
  Displacement             : 0.000134637
  Contact a-length         : 0.0200151
  Contact b-length         : 0.00243394
  Contact area             : 0.000153045
  Distance to Corner       : -0.00346062
  Effective Speed Factor   : 2.659
  Load-Life Factor         : 8.71792
                                       7
  Expected Average Life    : 2.195 10
```

```
==========================
 Ball number          : 31
 Ball angle           : 50.
 Ball position        : {1.99811, 1.39909, 0.}
 Solution current?    : Yes
 Ball activity        : ON
 Ball request         : solve
 Cross over angle          : 32.5929
 Residual Force Vector     : {0.0342663, -0.0344156, 0.00714495}
                                          -7
 Displacement Residual     : 1.7769 10
****
 Contact name              : DpCi
  Max Normal Load          : 19.6153
  Max Normal Stress        : -222526.
  Displacement             : 0.000116374
  Contact a-length         : 0.0186083
  Contact b-length         : 0.00226261
  Contact area             : 0.000132272
  Distance to Corner       : -0.00205378
  Effective Speed Factor   : 2.659
  Load-Life Factor         : 10.8446
                                        7
  Expected Average Life    : 5.25576 10
****
 Contact name              : DiCi
  Max Normal Load          : 12.9987
  Max Normal Stress        : -193788.
  Displacement             : 0.0000882616
  Contact a-length         : 0.0162055
  Contact b-length         : 0.00197053
  Contact area             : 0.000100322
  Distance to Corner: Dp   : 0.0100445
  Distance to Corner: Ds   : 0.0100445
  Effective Speed Factor   : 2.659
  Load-Life Factor         : 16.3647
                                        8
  Expected Average Life    : 2.72533 10
****
 Contact name              : DsCo
  Max Normal Load          : 24.4633
  Max Normal Stress        : -239537.
  Displacement             : 0.000134868
  Contact a-length         : 0.0200323
  Contact b-length         : 0.00243604
  Contact area             : 0.000153308
  Distance to Corner       : -0.00347783
  Effective Speed Factor   : 2.659
  Load-Life Factor         : 8.69548
                                        7
  Expected Average Life    : 2.17249 10
```

```
=========================
 Ball number          : 32
 Ball angle           : 40.
 Ball position        : {1.73339, 1.73339, 0.}
 Solution current?    : Yes
 Ball activity        : ON
 Ball request         : solve
 Cross over angle          : 32.4854
 Residual Force Vector     : {0.04009, -0.0284139, 0.0070673}
                                        -7
 Displacement Residual     : 1.80515 10
****
 Contact name              : DpCi
  Max Normal Load          : 19.6926
  Max Normal Stress        : -222819.
  Displacement             : 0.00011668
  Contact a-length         : 0.0186328
  Contact b-length         : 0.00226559
  Contact area             : 0.00013262
  Distance to Corner       : -0.00207825
  Effective Speed Factor   : 2.659
  Load-Life Factor         : 10.802
                                       7
  Expected Average Life    : 5.17377 10
****
 Contact name              : DiCi
  Max Normal Load          : 12.9953
  Max Normal Stress        : -193769.
  Displacement             : 0.0000882437
  Contact a-length         : 0.0162039
  Contact b-length         : 0.00197033
  Contact area             : 0.000100302
  Distance to Corner: Dp   : 0.0100461
  Distance to Corner: Ds   : 0.0100461
  Effective Speed Factor   : 2.659
  Load-Life Factor         : 16.369
                                       8
  Expected Average Life    : 2.72815 10
****
 Contact name              : DsCo
  Max Normal Load          : 24.5259
  Max Normal Stress        : -239742.
  Displacement             : 0.000135099
  Contact a-length         : 0.0200494
  Contact b-length         : 0.00243812
  Contact area             : 0.00015357
  Distance to Corner       : -0.00349493
  Effective Speed Factor   : 2.659
  Load-Life Factor         : 8.67327
                                       7
  Expected Average Life    : 2.15038 10
```

```
=========================
 Ball number          : 33
 Ball angle           : 30.
 Ball position        : {1.41303, 2.01802, 0.}
 Solution current?    : Yes
 Ball activity        : ON
 Ball request         : solve
 Cross over angle          : 32.3783
 Residual Force Vector     : {0.0448586, -0.0214204, 0.00698954}
                                                  -7
 Displacement Residual     : 1.83341 10
****
 Contact name              : DpCi
  Max Normal Load          : 19.7695
  Max Normal Stress        : -223109.
  Displacement             : 0.000116985
  Contact a-length         : 0.0186571
  Contact b-length         : 0.00226854
  Contact area             : 0.000132966
  Distance to Corner       : -0.00210256
  Effective Speed Factor   : 2.659
  Load-Life Factor         : 10.76
                                        7
  Expected Average Life    : 5.09368 10
****
 Contact name              : DiCi
  Max Normal Load          : 12.9917
  Max Normal Stress        : -193748.
  Displacement             : 0.0000882248
  Contact a-length         : 0.0162022
  Contact b-length         : 0.00197012
  Contact area             : 0.00010028
  Distance to Corner: Dp   : 0.0100478
  Distance to Corner: Ds   : 0.0100478
  Effective Speed Factor   : 2.659
  Load-Life Factor         : 16.3735
                                        8
  Expected Average Life    : 2.73117 10
****
 Contact name              : DsCo
  Max Normal Load          : 24.5883
  Max Normal Stress        : -239945.
  Displacement             : 0.000135328
  Contact a-length         : 0.0200664
  Contact b-length         : 0.00244018
  Contact area             : 0.00015383
  Distance to Corner       : -0.00351192
  Effective Speed Factor   : 2.659
  Load-Life Factor         : 8.65128
                                        7
  Expected Average Life    : 2.12866 10
```

```
=========================
 Ball number          : 34
 Ball angle           : 20.
 Ball position        : {1.04627, 2.24374, 0.}
 Solution current?    : Yes
 Ball activity        : ON
 Ball request         : solve
 Cross over angle          : 32.2717
 Residual Force Vector     : {0.0484022, -0.0136214, 0.00691169}
                                          -7
 Displacement Residual     : 1.86168 10
****
 Contact name              : DpCi
  Max Normal Load          : 19.8462
  Max Normal Stress        : -223398.
  Displacement             : 0.000117288
  Contact a-length         : 0.0186812
  Contact b-length         : 0.00227148
  Contact area             : 0.00013331
  Distance to Corner       : -0.00212672
  Effective Speed Factor   : 2.659
  Load-Life Factor         : 10.7184
                                        7
  Expected Average Life    : 5.01542 10
****
 Contact name              : DiCi
  Max Normal Load          : 12.9879
  Max Normal Stress        : -193726.
  Displacement             : 0.0000882047
  Contact a-length         : 0.0162003
  Contact b-length         : 0.00196989
  Contact area             : 0.000100257
  Distance to Corner: Dp   : 0.0100497
  Distance to Corner: Ds   : 0.0100497
  Effective Speed Factor   : 2.659
  Load-Life Factor         : 16.3783
                                        8
  Expected Average Life    : 2.73441 10
****
 Contact name              : DsCo
  Max Normal Load          : 24.6503
  Max Normal Stress        : -240147.
  Displacement             : 0.000135555
  Contact a-length         : 0.0200833
  Contact b-length         : 0.00244223
  Contact area             : 0.000154089
  Distance to Corner       : -0.00352879
  Effective Speed Factor   : 2.659
  Load-Life Factor         : 8.62951
                                        7
  Expected Average Life    : 2.10731 10
```

```
==========================
 Ball number          : 35
 Ball angle           : 10.
 Ball position        : {0.643902, 2.40308, 0.}
 Solution current?    : Yes
 Ball activity        : ON
 Ball request         : solve
 Cross over angle          : 32.1656
 Residual Force Vector     : {0.0505839, -0.00523249, 0.00683376}
                                                  -7
 Displacement Residual     : 1.88994 10
****
 Contact name              : DpCi
  Max Normal Load          : 19.9226
  Max Normal Stress        : -223685.
  Displacement             : 0.00011759
  Contact a-length         : 0.0187052
  Contact b-length         : 0.0022744
  Contact area             : 0.000133653
  Distance to Corner       : -0.00215072
  Effective Speed Factor   : 2.659
  Load-Life Factor         : 10.6773
                                       7
  Expected Average Life    : 4.93894 10
****
 Contact name              : DiCi
  Max Normal Load          : 12.9838
  Max Normal Stress        : -193703.
  Displacement             : 0.0000881836
  Contact a-length         : 0.0161984
  Contact b-length         : 0.00196966
  Contact area             : 0.000100233
  Distance to Corner: Dp   : 0.0100516
  Distance to Corner: Ds   : 0.0100516
  Effective Speed Factor   : 2.659
  Load-Life Factor         : 16.3835
                                       8
  Expected Average Life    : 2.73785 10
****
 Contact name              : DsCo
  Max Normal Load          : 24.712
  Max Normal Stress        : -240347.
  Displacement             : 0.000135782
  Contact a-length         : 0.0201001
  Contact b-length         : 0.00244427
  Contact area             : 0.000154346
  Distance to Corner       : -0.00354555
  Effective Speed Factor   : 2.659
  Load-Life Factor         : 8.60796
                                       7
  Expected Average Life    : 2.08634 10
```

```
==========================
 Ball number          : 36
 Ball angle           : 0.
 Ball position        : {0.217889, 2.49049, 0.}
 Solution current?    : Yes
 Ball activity        : ON
 Ball request         : solve
 Cross over angle          : 39.8205
 Residual Force Vector     : {0.425074, 0.305519, -0.211831}
                                        -6
 Displacement Residual     : 2.26765 10
****
 Contact name              : DpCo
  Max Normal Load          : 17.9522
  Max Normal Stress        : -217458.
  Displacement             : 0.000111144
  Contact a-length         : 0.0181853
  Contact b-length         : 0.00221134
  Contact area             : 0.000126336
  Distance to Corner       : -0.00163082
  Effective Speed Factor   : 2.659
  Load-Life Factor         : 11.8492
                                      7
  Expected Average Life    : 7.49103 10
****
 Contact name              : DiCi
  Max Normal Load          : 14.8001
  Max Normal Stress        : -200658.
  Displacement             : 0.0000946302
  Contact a-length         : 0.01678
  Contact b-length         : 0.00204038
  Contact area             : 0.000107561
  Distance to Corner: Dp   : 0.00946998
  Distance to Corner: Ds   : 0.00946998
  Effective Speed Factor   : 2.659
  Load-Life Factor         : 14.3729
                                        8
  Expected Average Life    : 1.62167 10
****
 Contact name              : DsCi
  Max Normal Load          : 22.7025
  Max Normal Stress        : -233578.
  Displacement             : 0.000128214
  Contact a-length         : 0.0195319
  Contact b-length         : 0.00237482
  Contact area             : 0.000145722
  Distance to Corner       : -0.00297743
  Effective Speed Factor   : 2.659
  Load-Life Factor         : 9.36988
                                      7
  Expected Average Life    : 2.929 10
```

```
=========================
Summary of Performance
=========================

 Applied Angular Twist (degrees) : 0.361843

 Total Internal Loads (Fx,Fy,Fz)
 Primary Disk                    : {-323.202, 55.5224, -409.088}
 Intermediate Disk               : {15.1257, -19.1926, -24.599}
 Secondary Disk                  : {316.206, -41.3887, 438.939}

 Total Axial Torque (Tz)
 Primary Disk                    : 31.5624
 Intermediate Disk               : 1196.67
 Secondary Disk                  : -1200.06

 Torque Ratio: Ds/Dp             : 38.0219
 Torque Ratio: Di/Dp             : 37.9143
 Torque Ratio: Di/Ds             : 0.997171

 Tosional Stiffness (T/rad)      : 190023.

 Average Residual Force          : {-0.225845, 0.140525, -0.14588}
                                              -6
 Average Displacement Residual   : 1.86629 10

 Dp Speed                        : 10.
 Ds Speed                        : 0.27027
 Speed Conversion Ratio          : 37.
 Effective N.D. Speed            : 20.
 Minimum Expected Average Life
                                             7
                         hours   : 4.93894 10
                         years   : 5638.06

  Average Load-Life Factor: Dp   : 11.7108
  Average Load-Life Factor: Di   : 15.2616
  Average Load-Life Factor: Ds   : 9.19041
```

```
==========================
Summary of Extreme Values
==========================

 Maximum Compressive Contact Stress Dp : -223685.
 At ball number                        : 35
 Maximum Compressive Contact Stress Di : -200658.
 At ball number                        : 36
 Maximum Compressive Contact Stress Ds : -233578.
 At ball number                        : 36

 Maximum Ball Deflection Dp            : 0.00011759
 At ball number                        : 35
 Maximum Ball Deflection Di            : 0.0000946302
 At ball number                        : 36
 Maximum Ball Deflection Ds            : 0.000135782
 At ball number                        : 35

 Maximum Ball Contact Area Dp          : 0.000133653
 At ball number                        : 35
 Maximum Ball Contact Area Di          : 0.000107561
 At ball number                        : 36
 Maximum Ball Contact Area Ds          : 0.000154346
 At ball number                        : 35

 Maximum Ball a-patch Dp               : 0.0187052
 At ball number                        : 35
 Maximum Ball a-patch Di               : 0.01678
 At ball number                        : 36
 Maximum Ball a-patch Ds               : 0.0201001
 At ball number                        : 35

 Maximum Ball b-patch Dp               : 0.0022744
 At ball number                        : 35
 Maximum Ball b-patch Di               : 0.00204038
 At ball number                        : 36
 Maximum Ball b-patch Ds               : 0.00244427
 At ball number                        : 35

 Minimum Distance to Dp Corner         : -0.00215072
 At ball number                        : 35
 Minimum Distance to Di Corner: Dp     : 0.00946998
 At ball number                        : 36
 Minimum Distance to Di Corner: Ds     : 0.00946998
 At ball number                        : 36
 Minimum Distance to Ds Corner         : -0.00354555
 At ball number                        : 35

==========================
==========================
```

SYNKdrive™ Speed Conversion Technology

Analytical and Numerical Results

Precision Speed Reducer for Robotics and Manufacturing
(TRP-93-009)

Conforming Race Design
Conforming Percentage: 52%
Flank Angle: 40 degrees
Applied Torque: 1200 in-lbs

1.0 Geometric Definition

```
Summary of Conforming Race Parameters
-------------------------------------
BallDiameter                    = 0.15625

ConformingDiameter              = 0.1625
ConformingPercentage            = 52.

PrimaryFlankAngleDegrees        = 40.
IntermediateFlankAngleDegrees   = 0.
SecondaryFlankAngleDegrees      = 40.

PrimaryFractionBallDepth        = 0.3
SecondaryFractionBallDepth      = 0.3

ToleranceFraction               = 0.01

ContactToCornerDistance for Dp = 0.0247607
ContactToCornerDistance for Ds = 0.0247607
```

```
Summary of Primary Disk Parameters
-----------------------------------
PrimaryDiskThickness            = 0.5
PrimaryDiskDiameter             = 6.

PrimaryRadiusMax                = 2.5
PrimaryRadiusMin                = 2.28125
PrimaryDisplacement             = 0.21875

PrimaryPhiIncrement             = 180.
PrimaryNumberLobes              = 1


Summary of Intermediate Disk Parameters
---------------------------------------
IntermediateDiskThickness       = 0.0525
IntermediateDiskDiameter        = 6.

IntermediateRadiusMax           = 2.5
IntermediateRadiusMin           = 2.28125
IntermediateDisplacement        = 0.21875
IntermediateSlotWidth           = 0.15625

IntermediateTotalSlots          = 36
IntermediateGammaIncrement      = 10.


Summary of Secondary Disk Parameters
-----------------------------------
SecondaryDiskThickness          = 0.5
SecondaryDiskDiameter           = 6.

SecondaryRadiusMax              = 2.5
SecondaryRadiusMin              = 2.28125
SecondaryDisplacement           = 0.21875

SecondaryPhiIncrement           = 4.86486
SecondaryNumberLobes            = 37
```

2.0 Ball Race Section Profile

Primary and Secondary Race Profiles

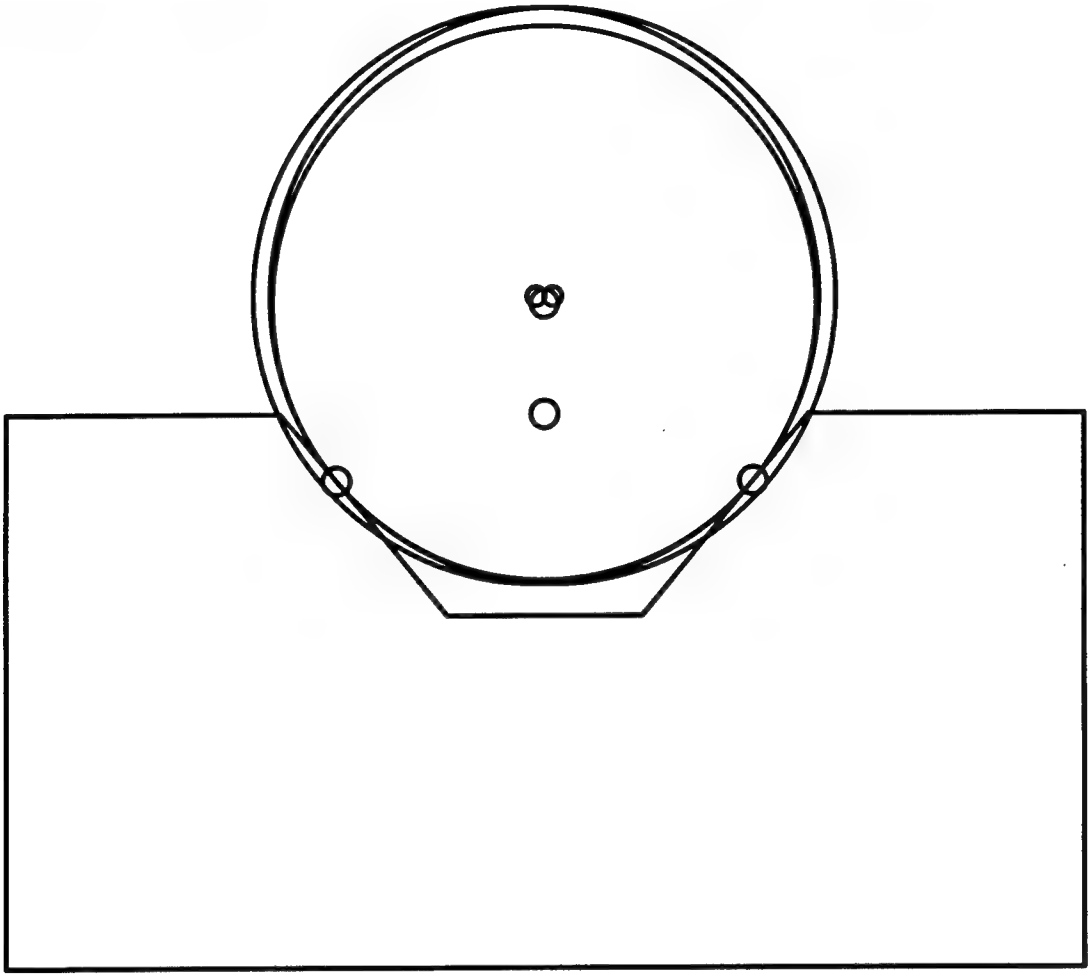

3.0 Constraints and Kinematic Results

```
Summary of Drive Constraint Parameters
--------------------------------------
PrimaryNumberLobes              = 1
SecondaryNumberLobes            = 37
IntermediateTotalSlots          = 36 (requested balls)

BallConjugateDirection          = forward drive
BallConstraintCondition         = exactly constrained

Conjugate constraints           = 36
Forward drive condition         = 36
Reverser drive condition        = 38
Predicted speed ratio           = 37 to 1


Summary of Kinematic Solver Results
-----------------------------------
PrimaryAngleStart               = 0.
PrimaryAngleFinish              = 5.
PrimaryAngleDelta               = 1.
PrimaryAngleNumber              = 6.
Speed Conversion Ratio (Dp:Ds)  = 37. to 1

PrimaryDiskDeltaAngle:
   Step          Dp Angle          Ds Angle
   ----          --------          --------
                                           -17
    1              0.              2.77556 10
    2              1.              0.027027
    3              2.              0.0540541
    4              3.              0.0810811
    5              4.              0.108108
    6              5.              0.135135
```

4.0 Numerical Results

```
================================================
Summary of Stress and Displacement Calculations
================================================
 Calculated for kinematic solution : 6
 Angular Deformation               : 0.395194
 Applied Torque                    : 1200.
```

```
=========================
 Ball number          : 1
 Ball angle           : 350.
 Ball position        : {-0.21683, 2.47838, 0.}
 Solution current?    : Yes
 Ball activity        : ON
 Ball request         : solve
 Cross over angle          : 37.2375
 Residual Force Vector     : {0.503809, 0.29151, -0.14441}
                                          -6
 Displacement Residual     : 2.39583 10
****
 Contact name              : DpCo
  Max Normal Load          : 19.8801
  Max Normal Stress        : -224625.
  Displacement             : 0.000118592
  Contact a-length         : 0.0187847
  Contact b-length         : 0.00228422
  Contact area             : 0.000134801
  Distance to Corner       : 0.00597596
  Effective Speed Factor   : 2.659
  Load-Life Factor         : 10.7002
                                        7
  Expected Average Life    : 4.98132 10
****
 Contact name              : DiCi
  Max Normal Load          : 14.9633
  Max Normal Stress        : -201057.
  Displacement             : 0.0000950073
  Contact a-length         : 0.0168134
  Contact b-length         : 0.00204444
  Contact area             : 0.000107989
  Distance to Corner: Dp   : 0.00943658
  Distance to Corner: Ds   : 0.00943658
  Effective Speed Factor   : 2.659
  Load-Life Factor         : 14.2161
                                        8
  Expected Average Life    : 1.55205 10
****
 Contact name              : DsCi
  Max Normal Load          : 24.1761
  Max Normal Stress        : -238811.
  Displacement             : 0.000134022
  Contact a-length         : 0.0199695
  Contact b-length         : 0.00242802
  Contact area             : 0.000152324
  Distance to Corner       : 0.00479119
  Effective Speed Factor   : 2.659
  Load-Life Factor         : 8.79877
                                        7
  Expected Average Life    : 2.27756 10
```

```
=========================
 Ball number          : 2
 Ball angle           : 340.
 Ball position        : {-0.640757, 2.39134, 0.}
 Solution current?    : Yes
 Ball activity        : ON
 Ball request         : solve
 Cross over angle          : 37.3348
 Residual Force Vector     : {0.435179, 0.371096, -0.145469}
                                                  -6
 Displacement Residual     : 2.35975 10
****
 Contact name              : DpCo
  Max Normal Load          : 19.8138
  Max Normal Stress        : -224371.
  Displacement             : 0.000118324
  Contact a-length         : 0.0187635
  Contact b-length         : 0.00228164
  Contact area             : 0.000134496
  Distance to Corner       : 0.00599721
  Effective Speed Factor   : 2.659
  Load-Life Factor         : 10.7359
                                        7
  Expected Average Life    : 5.0483 10
****
 Contact name              : DiCi
  Max Normal Load          : 14.9524
  Max Normal Stress        : -201048.
  Displacement             : 0.0000949982
  Contact a-length         : 0.0168126
  Contact b-length         : 0.00204434
  Contact area             : 0.000107979
  Distance to Corner: Dp   : 0.00943738
  Distance to Corner: Ds   : 0.00943738
  Effective Speed Factor   : 2.659
  Load-Life Factor         : 14.2265
                                        8
  Expected Average Life    : 1.55658 10
****
 Contact name              : DsCi
  Max Normal Load          : 24.1244
  Max Normal Stress        : -238629.
  Displacement             : 0.000133819
  Contact a-length         : 0.0199543
  Contact b-length         : 0.00242618
  Contact area             : 0.000152093
  Distance to Corner       : 0.00480638
  Effective Speed Factor   : 2.659
  Load-Life Factor         : 8.81762
                                        7
  Expected Average Life    : 2.29715 10
```

```
=========================
 Ball number          : 3
 Ball angle           : 330.
 Ball position        : {-1.04114, 2.23273, 0.}
 Solution current?    : Yes
 Ball activity        : ON
 Ball request         : solve
 Cross over angle          : 37.4324
 Residual Force Vector     : {0.354572, 0.435769, -0.146485}
                                          -6
 Displacement Residual     : 2.32368 10
****
 Contact name              : DpCo
  Max Normal Load          : 19.7473
  Max Normal Stress        : -224115.
  Displacement             : 0.000118054
  Contact a-length         : 0.0187421
  Contact b-length         : 0.00227904
  Contact area             : 0.00013419
  Distance to Corner       : 0.00601858
  Effective Speed Factor   : 2.659
  Load-Life Factor         : 10.7721
                                        7
  Expected Average Life    : 5.11662 10
****
 Contact name              : DiCi
  Max Normal Load          : 14.9413
  Max Normal Stress        : -201037.
  Displacement             : 0.0000949882
  Contact a-length         : 0.0168117
  Contact b-length         : 0.00204424
  Contact area             : 0.000107968
  Distance to Corner: Dp   : 0.00943827
  Distance to Corner: Ds   : 0.00943827
  Effective Speed Factor   : 2.659
  Load-Life Factor         : 14.237
                                        8
  Expected Average Life    : 1.56121 10
****
 Contact name              : DsCi
  Max Normal Load          : 24.0725
  Max Normal Stress        : -238446.
  Displacement             : 0.000133614
  Contact a-length         : 0.019939
  Contact b-length         : 0.00242432
  Contact area             : 0.00015186
  Distance to Corner       : 0.00482167
  Effective Speed Factor   : 2.659
  Load-Life Factor         : 8.83665
                                        7
  Expected Average Life    : 2.31705 10
```

```
=========================
 Ball number         : 4
 Ball angle          : 320.
 Ball position       : {-1.40606, 2.00806, 0.}
 Solution current?   : Yes
 Ball activity       : ON
 Ball request        : solve
 Cross over angle          : 37.5304
 Residual Force Vector     : {0.265063, 0.48385, -0.147457}
                                          -6
 Displacement Residual     : 2.28764 10
****
 Contact name              : DpCo
  Max Normal Load          : 19.6806
  Max Normal Stress        : -223858.
  Displacement             : 0.000117784
  Contact a-length         : 0.0187206
  Contact b-length         : 0.00227643
  Contact area             : 0.000133882
  Distance to Corner       : 0.00604008
  Effective Speed Factor   : 2.659
  Load-Life Factor         : 10.8086
                                        7
  Expected Average Life    : 5.18632 10
****
 Contact name              : DiCi
  Max Normal Load          : 14.93
  Max Normal Stress        : -201026.
  Displacement             : 0.0000949772
  Contact a-length         : 0.0168108
  Contact b-length         : J.00204412
  Contact area             : 0.000107955
  Distance to Corner: Dp   : 0.00943924
  Distance to Corner: Ds   : 0.00943924
  Effective Speed Factor   : 2.659
  Load-Life Factor         : 14.2478
                                        8
  Expected Average Life    : 1.56594 10
****
 Contact name              : DsCi
  Max Normal Load          : 24.0202
  Max Normal Stress        : -238262.
  Displacement             : 0.000133408
  Contact a-length         : 0.0199236
  Contact b-length         : 0.00242245
  Contact area             : 0.000151626
  Distance to Corner       : 0.00483704
  Effective Speed Factor   : 2.659
  Load-Life Factor         : 8.85587
                                        7
  Expected Average Life    : 2.33727 10
```

```
=========================
 Ball number          : 5
 Ball angle           : 310.
 Ball position        : {-1.7248, 1.7248, 0.}
 Solution current?    : Yes
 Ball activity        : ON
 Ball request         : solve
 Cross over angle          : 37.6288
 Residual Force Vector     : {0.16994, 0.514271, -0.148384}
                                        -6
 Displacement Residual     : 2.25163 10
****
 Contact name              : DpCo
  Max Normal Load          : 19.6138
  Max Normal Stress        : -223600.
  Displacement             : 0.000117512
  Contact a-length         : 0.018699
  Contact b-length         : 0.0022738
  Contact area             : 0.000133573
  Distance to Corner       : 0.0060617
  Effective Speed Factor   : 2.659
  Load-Life Factor         : 10.8454
                                      7
  Expected Average Life    : 5.25743 10
****
 Contact name              : DiCi
  Max Normal Load          : 14.9185
  Max Normal Stress        : -201013.
  Displacement             : 0.0000949653
  Contact a-length         : 0.0168097
  Contact b-length         : 0.00204399
  Contact area             : 0.000107942
  Distance to Corner: Dp   : 0.00944029
  Distance to Corner: Ds   : 0.00944029
  Effective Speed Factor   : 2.659
  Load-Life Factor         : 14.2588
                                      8
  Expected Average Life    : 1.57077 10
****
 Contact name              : DsCi
  Max Normal Load          : 23.9677
  Max Normal Stress        : -238077.
  Displacement             : 0.000133201
  Contact a-length         : 0.0199082
  Contact b-length         : 0.00242057
  Contact area             : 0.00015139
  Distance to Corner       : 0.00485251
  Effective Speed Factor   : 2.659
  Load-Life Factor         : 8.87527
                                      7
  Expected Average Life    : 2.35782 10
```

```
==========================
 Ball number          : 6
 Ball angle           : 300.
 Ball position        : {-1.98815, 1.39212, 0.}
 Solution current?    : Yes
 Ball activity        : ON
 Ball request         : solve
 Cross over angle          : 37.7277
 Residual Force Vector     : {0.0725791, 0.526594, -0.149265}
                                        -6
 Displacement Residual     : 2.21565 10
****
 Contact name              : DpCo
  Max Normal Load          : 19.5467
  Max Normal Stress        : -223340.
  Displacement             : 0.000117239
  Contact a-length         : 0.0186772
  Contact b-length         : 0.00227115
  Contact area             : 0.000133263
  Distance to Corner       : 0.00608345
  Effective Speed Factor   : 2.659
  Load-Life Factor         : 10.8827
                                       7
  Expected Average Life    : 5.32997 10
****
 Contact name              : DiCi
  Max Normal Load          : 14.9068
  Max Normal Stress        : -200999.
  Displacement             : 0.0000949525
  Contact a-length         : 0.0168086
  Contact b-length         : 0.00204385
  Contact area             : 0.000107927
  Distance to Corner: Dp   : 0.00944143
  Distance to Corner: Ds   : 0.00944143
  Effective Speed Factor   : 2.659
  Load-Life Factor         : 14.27
                                      8
  Expected Average Life    : 1.5757 10
****
 Contact name              : DsCi
  Max Normal Load          : 23.9149
  Max Normal Stress        : -237891.
  Displacement             : 0.000132992
  Contact a-length         : 0.0198926
  Contact b-length         : 0.00241868
  Contact area             : 0.000151154
  Distance to Corner       : 0.00486807
  Effective Speed Factor   : 2.659
  Load-Life Factor         : 8.89487
                                       7
  Expected Average Life    : 2.37871 10
```

```
=========================
 Ball number          : 7
 Ball angle           : 290.
 Ball position        : {-2.18867, 1.02059, 0.}
 Solution current?    : Yes
 Ball activity        : ON
 Ball request         : solve
 Cross over angle          : 37.8269
 Residual Force Vector     : {-0.0236712, 0.521014, -0.150101}
                                      -6
 Displacement Residual     : 2.17969 10
****
 Contact name              : DpCo
  Max Normal Load          : 19.4794
  Max Normal Stress        : -223078.
  Displacement             : 0.000116964
  Contact a-length         : 0.0186554
  Contact b-length         : 0.00226849
  Contact area             : 0.000132951
  Distance to Corner       : 0.00610533
  Effective Speed Factor   : 2.659
  Load-Life Factor         : 10.9203
                                    7
  Expected Average Life    : 5.404 10
****
 Contact name              : DiCi
  Max Normal Load          : 14.8949
  Max Normal Stress        : -200985.
  Displacement             : 0.0000949387
  Contact a-length         : 0.0168074
  Contact b-length         : 0.0020437
  Contact area             : 0.000107911
  Distance to Corner: Dp   : 0.00944265
  Distance to Corner: Ds   : 0.00944265
  Effective Speed Factor   : 2.659
  Load-Life Factor         : 14.2814
                                     8
  Expected Average Life    : 1.58075 10
****
 Contact name              : DsCi
  Max Normal Load          : 23.8619
  Max Normal Stress        : -237704.
  Displacement             : 0.000132783
  Contact a-length         : 0.019877
  Contact b-length         : 0.00241677
  Contact area             : 0.000150916
  Distance to Corner       : 0.00488373
  Effective Speed Factor   : 2.659
  Load-Life Factor         : 8.91465
                                     7
  Expected Average Life    : 2.39994 10
```

```
==========================
 Ball number          : 8
 Ball angle           : 280.
 Ball position        : {-2.32091, 0.621885, 0.}
 Solution current?    : Yes
 Ball activity        : ON
 Ball request         : solve
 Cross over angle          : 37.9266
 Residual Force Vector     : {-0.115604, 0.498326, -0.150889}
                                                  -6
 Displacement Residual     : 2.14377 10
****
 Contact name              : DpCo
  Max Normal Load          : 19.4119
  Max Normal Stress        : -222815.
  Displacement             : 0.000116688
  Contact a-length         : 0.0186333
  Contact b-length         : 0.00226581
  Contact area             : 0.000132637
  Distance to Corner       : 0.00612733
  Effective Speed Factor   : 2.659
  Load-Life Factor         : 10.9582
                                        7
  Expected Average Life    : 5.47954 10
****
 Contact name              : DiCi
  Max Normal Load          : 14.8828
  Max Normal Stress        : -200969.
  Displacement             : 0.000094924
  Contact a-length         : 0.016806
  Contact b-length         : 0.00204355
  Contact area             : 0.000107895
  Distance to Corner: Dp   : 0.00944396
  Distance to Corner: Ds   : 0.00944396
  Effective Speed Factor   : 2.659
  Load-Life Factor         : 14.293
                                       8
  Expected Average Life    : 1.5859 10
****
 Contact name              : DsCi
  Max Normal Load          : 23.8085
  Max Normal Stress        : -237516.
  Displacement             : 0.000132573
  Contact a-length         : 0.0198612
  Contact b-length         : 0.00241486
  Contact area             : 0.000150677
  Distance to Corner       : 0.00489948
  Effective Speed Factor   : 2.659
  Load-Life Factor         : 8.93462
                                        7
  Expected Average Life    : 2.42152 10
```

```
=========================
 Ball number          : 9
 Ball angle           : 270.
 Ball position        : {-2.38153, 0.208357, 0.}
 Solution current?    : Yes
 Ball activity        : ON
 Ball request         : solve
 Cross over angle          : 38.0267
 Residual Force Vector     : {-0.200263, 0.459886, -0.151629}
                                                  -6
 Displacement Residual     : 2.10788 10
****
 Contact name              : DpCo
  Max Normal Load          : 19.3442
  Max Normal Stress        : -222551.
  Displacement             : 0.000116411
  Contact a-length         : 0.0186112
  Contact b-length         : 0.00226312
  Contact area             : 0.000132322
  Distance to Corner       : 0.00614947
  Effective Speed Factor   : 2.659
  Load-Life Factor         : 10.9966
                                       7
  Expected Average Life    : 5.55663 10
****
 Contact name              : DiCi
  Max Normal Load          : 14.8705
  Max Normal Stress        : -200953.
  Displacement             : 0.0000949082
  Contact a-length         : 0.0168047
  Contact b-length         : 0.00204338
  Contact area             : 0.000107877
  Distance to Corner: Dp   : 0.00944535
  Distance to Corner: Ds   : 0.00944535
  Effective Speed Factor   : 2.659
  Load-Life Factor         : 14.3048
                                       8
  Expected Average Life    : 1.59116 10
****
 Contact name              : DsCi
  Max Normal Load          : 23.7549
  Max Normal Stress        : -237326.
  Displacement             : 0.000132361
  Contact a-length         : 0.0198454
  Contact b-length         : 0.00241293
  Contact area             : 0.000150437
  Distance to Corner       : 0.00491532
  Effective Speed Factor   : 2.659
  Load-Life Factor         : 8.95479
                                       7
  Expected Average Life    : 2.44346 10
```

```
=========================
 Ball number          : 10
 Ball angle           : 260.
 Ball position        : {-2.36942, -0.207298, 0.}
 Solution current?    : Yes
 Ball activity        : ON
 Ball request         : solve
 Cross over angle          : 38.1272
 Residual Force Vector     : {-0.275033, 0.407548, -0.15232}
                                          -6
 Displacement Residual     : 2.07203 10
****
 Contact name              : DpCo
  Max Normal Load          : 19.2763
  Max Normal Stress        : -222284.
  Displacement             : 0.000116133
  Contact a-length         : 0.0185889
  Contact b-length         : 0.00226042
  Contact area             : 0.000132006
  Distance to Corner       : 0.00617173
  Effective Speed Factor   : 2.659
  Load-Life Factor         : 11.0353
                                        7
  Expected Average Life    : 5.63531 10
****
 Contact name              : DiCi
  Max Normal Load          : 14.858
  Max Normal Stress        : -200935.
  Displacement             : 0.0000948915
  Contact a-length         : 0.0168032
  Contact b-length         : 0.0020432
  Contact area             : 0.000107858
  Distance to Corner: Dp   : 0.00944683
  Distance to Corner: Ds   : 0.00944683
  Effective Speed Factor   : 2.659
  Load-Life Factor         : 14.3169
                                        8
  Expected Average Life    : 1.59653 10
****
 Contact name              : DsCi
  Max Normal Load          : 23.701
  Max Normal Stress        : -237136.
  Displacement             : 0.000132149
  Contact a-length         : 0.0198294
  Contact b-length         : 0.00241099
  Contact area             : 0.000150195
  Distance to Corner       : 0.00493126
  Effective Speed Factor   : 2.659
  Load-Life Factor         : 8.97516
                                        7
  Expected Average Life    : 2.46577 10
```

```
==========================
 Ball number          : 11
 Ball angle           : 250.
 Ball position        : {-2.28569, -0.612449, 0.}
 Solution current?    : Yes
 Ball activity        : ON
 Ball request         : solve
 Cross over angle          : 38.2281
 Residual Force Vector     : {-0.337724, 0.343581, -0.152961}
                                      -6
 Displacement Residual     : 2.03622 10
****
 Contact name              : DpCo
  Max Normal Load          : 19.2083
  Max Normal Stress        : -222017.
  Displacement             : 0.000115853
  Contact a-length         : 0.0185666
  Contact b-length         : 0.00225769
  Contact area             : 0.000131688
  Distance to Corner       : 0.00619413
  Effective Speed Factor   : 2.659
  Load-Life Factor         : 11.0744
                                        7
  Expected Average Life    : 5.71562 10
****
 Contact name              : DiCi
  Max Normal Load          : 14.8453
  Max Normal Stress        : -200916.
  Displacement             : 0.0000948738
  Contact a-length         : 0.0168016
  Contact b-length         : 0.00204301
  Contact area             : 0.000107838
  Distance to Corner: Dp   : 0.00944839
  Distance to Corner: Ds   : 0.00944839
  Effective Speed Factor   : 2.659
  Load-Life Factor         : 14.3292
                                        8
  Expected Average Life    : 1.60202 10
****
 Contact name              : DsCi
  Max Normal Load          : 23.6468
  Max Normal Stress        : -236944.
  Displacement             : 0.000131935
  Contact a-length         : 0.0198134
  Contact b-length         : 0.00240904
  Contact area             : 0.000149952
  Distance to Corner       : 0.00494729
  Effective Speed Factor   : 2.659
  Load-Life Factor         : 8.99573
                                        7
  Expected Average Life    : 2.48845 10
```

```
========================
 Ball number         : 12
 Ball angle          : 240.
 Ball position       : {-2.1336, -0.994914, 0.}
 Solution current?   : Yes
 Ball activity       : ON
 Ball request        : solve
 Cross over angle          : 38.3294
 Residual Force Vector     : {-0.386636, 0.270583, -0.153551}
                                          -6
 Displacement Residual     : 2.00045 10
****
 Contact name              : DpCo
  Max Normal Load          : 19.14
  Max Normal Stress        : -221747.
  Displacement             : 0.000115572
  Contact a-length         : 0.018544
  Contact b-length         : 0.00225495
  Contact area             : 0.000131369
  Distance to Corner       : 0.00621665
  Effective Speed Factor   : 2.659
  Load-Life Factor         : 11.1139
                                        7
  Expected Average Life    : 5.7976 10
****
 Contact name              : DiCi
  Max Normal Load          : 14.8323
  Max Normal Stress        : -200896.
  Displacement             : 0.0000948551
  Contact a-length         : 0.0168
  Contact b-length         : 0.0020428
  Contact area             : 0.000107816
  Distance to Corner: Dp   : 0.00945005
  Distance to Corner: Ds   : 0.00945005
  Effective Speed Factor   : 2.659
  Load-Life Factor         : 14.3417
                                        8
  Expected Average Life    : 1.60762 10
****
 Contact name              : DsCi
  Max Normal Load          : 23.5923
  Max Normal Stress        : -236751.
  Displacement             : 0.000131721
  Contact a-length         : 0.0197973
  Contact b-length         : 0.00240708
  Contact area             : 0.000149708
  Distance to Corner       : 0.00496342
  Effective Speed Factor   : 2.659
  Load-Life Factor         : 9.0165
                                        7
  Expected Average Life    : 2.51151 10
```

```
=========================
 Ball number         : 13
 Ball angle          : 230.
 Ball position       : {-1.91847, -1.34332, 0.}
 Solution current?   : Yes
 Ball activity       : ON
 Ball request        : solve
 Cross over angle         : 38.4311
 Residual Force Vector    : {-0.420598, 0.191376, -0.15409}
                                      -6
 Displacement Residual    : 1.96472 10
****
 Contact name             : DpCo
  Max Normal Load         : 19.0715
  Max Normal Stress       : -221476.
  Displacement            : 0.00011529
  Contact a-length        : 0.0185214
  Contact b-length        : 0.0022522
  Contact area            : 0.000131048
  Distance to Corner      : 0.00623931
  Effective Speed Factor  : 2.659
  Load-Life Factor        : 11.1538
                                    7
  Expected Average Life   : 5.8813 10
****
 Contact name             : DiCi
  Max Normal Load         : 14.8191
  Max Normal Stress       : -200875.
  Displacement            : 0.0000948354
  Contact a-length        : 0.0167982
  Contact b-length        : 0.00204259
  Contact area            : 0.000107794
  Distance to Corner: Dp  : 0.0094518
  Distance to Corner: Ds  : 0.0094518
  Effective Speed Factor  : 2.659
  Load-Life Factor        : 14.3544
                                     8
  Expected Average Life   : 1.61333 10
****
 Contact name             : DsCi
  Max Normal Load         : 23.5375
  Max Normal Stress       : -236557.
  Displacement            : 0.000131505
  Contact a-length        : 0.019781
  Contact b-length        : 0.00240511
  Contact area            : 0.000149463
  Distance to Corner      : 0.00497965
  Effective Speed Factor  : 2.659
  Load-Life Factor        : 9.03748
                                    7
  Expected Average Life   : 2.53497 10
```

```
=========================
 Ball number          : 14
 Ball angle           : 220.
 Ball position        : {-1.64746, -1.64746, 0.}
 Solution current?    : Yes
 Ball activity        : ON
 Ball request         : solve
 Cross over angle         : 38.5333
 Residual Force Vector    : {-0.438999, 0.108905, -0.154576}
                                                  -6
 Displacement Residual    : 1.92904 10
****
 Contact name             : DpCo
  Max Normal Load         : 19.0029
  Max Normal Stress       : -221204.
  Displacement            : 0.000115007
  Contact a-length        : 0.0184986
  Contact b-length        : 0.00224943
  Contact area            : 0.000130725
  Distance to Corner      : 0.0062621
  Effective Speed Factor  : 2.659
  Load-Life Factor        : 11.1941
                                       7
  Expected Average Life   : 5.96675 10
****
 Contact name             : DiCi
  Max Normal Load         : 14.8058
  Max Normal Stress       : -200853.
  Displacement            : 0.0000948147
  Contact a-length        : 0.0167964
  Contact b-length        : 0.00204237
  Contact area            : 0.00010777
  Distance to Corner: Dp  : 0.00945363
  Distance to Corner: Ds  : 0.00945363
  Effective Speed Factor  : 2.659
  Load-Life Factor        : 14.3674
                                       8
  Expected Average Life   : 1.61917 10
****
 Contact name             : DsCi
  Max Normal Load         : 23.4825
  Max Normal Stress       : -236362.
  Displacement            : 0.000131288
  Contact a-length        : 0.0197647
  Contact b-length        : 0.00240312
  Contact area            : 0.000149216
  Distance to Corner      : 0.00499597
  Effective Speed Factor  : 2.659
  Load-Life Factor        : 9.05866
                                       7
  Expected Average Life   : 2.55882 10
```

```
=========================
 Ball number         : 15
 Ball angle          : 210.
 Ball position       : {-1.32938, -1.89856, 0.}
 Solution current?   : Yes
 Ball activity       : ON
 Ball request        : solve
 Cross over angle          : 38.6358
 Residual Force Vector     : {-0.441789, 0.0261266, -0.155009}
                                      -6
 Displacement Residual     : 1.8934 10
****
 Contact name              : DpCo
  Max Normal Load          : 18.9341
  Max Normal Stress        : -220930.
  Displacement             : 0.000114722
  Contact a-length         : 0.0184757
  Contact b-length         : 0.00224664
  Contact area             : 0.000130402
  Distance to Corner       : 0.00628502
  Effective Speed Factor   : 2.659
  Load-Life Factor         : 11.2348
                                    7
  Expected Average Life    : 6.054 10
****
 Contact name              : DiCi
  Max Normal Load          : 14.7922
  Max Normal Stress        : -200830.
  Displacement             : 0.0000947929
  Contact a-length         : 0.0167944
  Contact b-length         : 0.00204213
  Contact area             : 0.000107746
  Distance to Corner: Dp   : 0.00945556
  Distance to Corner: Ds   : 0.00945556
  Effective Speed Factor   : 2.659
  Load-Life Factor         : 14.3806
                                      8
  Expected Average Life    : 1.62513 10
****
 Contact name              : DsCi
  Max Normal Load          : 23.4272
  Max Normal Stress        : -236165.
  Displacement             : 0.00013107
  Contact a-length         : 0.0197483
  Contact b-length         : 0.00240113
  Contact area             : 0.000148969
  Distance to Corner       : 0.0050124
  Effective Speed Factor   : 2.659
  Load-Life Factor         : 9.08006
                                    7
  Expected Average Life    : 2.58308 10
```

```
==========================
 Ball number          : 16
 Ball angle           : 200.
 Ball position        : {-0.97437, -2.08954, 0.}
 Solution current?    : Yes
 Ball activity        : ON
 Ball request         : solve
 Cross over angle          : 38.7388
 Residual Force Vector     : {-0.429466, -0.0540916, -0.155388}
                                                  -6
 Displacement Residual     : 1.85782 10
****
 Contact name              : DpCo
  Max Normal Load          : 18.865
  Max Normal Stress        : -220654.
  Displacement             : 0.000114436
  Contact a-length         : 0.0184526
  Contact b-length         : 0.00224383
  Contact area             : 0.000130076
  Distance to Corner       : 0.00630807
  Effective Speed Factor   : 2.659
  Load-Life Factor         : 11.2759
                                      7
  Expected Average Life    : 6.1431 10
****
 Contact name              : DiCi
  Max Normal Load          : 14.7784
  Max Normal Stress        : -200806.
  Displacement             : 0.0000947701
  Contact a-length         : 0.0167924
  Contact b-length         : 0.00204189
  Contact area             : 0.00010772
  Distance to Corner: Dp   : 0.00945758
  Distance to Corner: Ds   : 0.00945758
  Effective Speed Factor   : 2.659
  Load-Life Factor         : 14.394
                                        8
  Expected Average Life    : 1.63121 10
****
 Contact name              : DsCi
  Max Normal Load          : 23.3716
  Max Normal Stress        : -235968.
  Displacement             : 0.00013085
  Contact a-length         : 0.0197318
  Contact b-length         : 0.00239912
  Contact area             : 0.000148719
  Distance to Corner       : 0.00502892
  Effective Speed Factor   : 2.659
  Load-Life Factor         : 9.10166
                                      7
  Expected Average Life    : 2.60775 10
```

```
=========================
 Ball number          : 17
 Ball angle           : 190.
 Ball position        : {-0.593576, -2.21526, 0.}
 Solution current?    : Yes
 Ball activity        : ON
 Ball request         : solve
 Cross over angle          : 38.8422
 Residual Force Vector     : {-0.403037, -0.129072, -0.155712}
                                                  -6
 Displacement Residual     : 1.82228 10
****
 Contact name              : DpCo
  Max Normal Load          : 18.7958
  Max Normal Stress        : -220377.
  Displacement             : 0.000114148
  Contact a-length         : 0.0184294
  Contact b-length         : 0.00224101
  Contact area             : 0.00012975
  Distance to Corner       : 0.00633126
  Effective Speed Factor   : 2.659
  Load-Life Factor         : 11.3174
                                        7
  Expected Average Life    : 6.23409 10
****
 Contact name              : DiCi
  Max Normal Load          : 14.7644
  Max Normal Stress        : -200781.
  Displacement             : 0.0000947462
  Contact a-length         : 0.0167903
  Contact b-length         : 0.00204163
  Contact area             : 0.000107693
  Distance to Corner: Dp   : 0.0094597
  Distance to Corner: Ds   : 0.0094597
  Effective Speed Factor   : 2.659
  Load-Life Factor         : 14.4077
                                        8
  Expected Average Life    : 1.63741 10
****
 Contact name              : DsCi
  Max Normal Load          : 23.3156
  Max Normal Stress        : -235769.
  Displacement             : 0.00013063
  Contact a-length         : 0.0197151
  Contact b-length         : 0.0023971
  Contact area             : 0.000148469
  Distance to Corner       : 0.00504553
  Effective Speed Factor   : 2.659
  Load-Life Factor         : 9.12349
                                        7
  Expected Average Life    : 2.63286 10
```

```
=========================
 Ball number          : 18
 Ball angle           : 180.
 Ball position        : {-0.198824, -2.27257, 0.}
 Solution current?    : Yes
 Ball activity        : ON
 Ball request         : solve
 Cross over angle          : 31.7656
 Residual Force Vector     : {-0.0739164, -0.00322451, 0.010387}
                                                  -7
 Displacement Residual     : 2.78822 10
****
 Contact name              : DpCi
  Max Normal Load          : 20.5737
  Max Normal Stress        : -226110.
  Displacement             : 0.000120154
  Contact a-length         : 0.0189081
  Contact b-length         : 0.00229907
  Contact area             : 0.000136568
  Distance to Corner       : 0.00585262
  Effective Speed Factor   : 2.659
  Load-Life Factor         : 10.3394
                                        7
  Expected Average Life    : 4.34281 10
****
 Contact name              : DiCi
  Max Normal Load          : 13.0052
  Max Normal Stress        : -193714.
  Displacement             : 0.0000881938
  Contact a-length         : 0.0161993
  Contact b-length         : 0.00196977
  Contact area             : 0.000100245
  Distance to Corner: Dp   : 0.0100507
  Distance to Corner: Ds   : 0.0100507
  Effective Speed Factor   : 2.659
  Load-Life Factor         : 16.3566
                                        8
  Expected Average Life    : 2.71989 10
****
 Contact name              : DsCo
  Max Normal Load          : 25.2102
  Max Normal Stress        : -241976.
  Displacement             : 0.000137629
  Contact a-length         : 0.0202363
  Contact b-length         : 0.00246084
  Contact area             : 0.000156446
  Distance to Corner       : 0.00452437
  Effective Speed Factor   : 2.659
  Load-Life Factor         : 8.43785
                                        7
  Expected Average Life    : 1.92624 10
```

```
==========================
 Ball number          : 19
 Ball angle           : 170.
 Ball position        : {0.199883, -2.28468, 0.}
 Solution current?    : Yes
 Ball activity        : ON
 Ball request         : solve
 Cross over angle          : 31.66
 Residual Force Vector     : {-0.0727338, -0.0159131, 0.0102101}
                                                  -7
 Displacement Residual     : 2.81512 10
****
 Contact name              : DpCi
  Max Normal Load          : 20.652
  Max Normal Stress        : -226398.
  Displacement             : 0.00012046
  Contact a-length         : 0.0189321
  Contact b-length         : 0.00230199
  Contact area             : 0.000136915
  Distance to Corner       : 0.00582859
  Effective Speed Factor   : 2.659
  Load-Life Factor         : 10.3002
                                        7
  Expected Average Life    : 4.27731 10
****
 Contact name              : DiCi
  Max Normal Load          : 13.0017
  Max Normal Stress        : -193694.
  Displacement             : 0.0000881756
  Contact a-length         : 0.0161976
  Contact b-length         : 0.00196957
  Contact area             : 0.000100224
  Distance to Corner: Dp   : 0.0100524
  Distance to Corner: Ds   : 0.0100524
  Effective Speed Factor   : 2.659
  Load-Life Factor         : 16.3609
                                        8
  Expected Average Life    : 2.7228 10
****
 Contact name              : DsCo
  Max Normal Load          : 25.2747
  Max Normal Stress        : -242182.
  Displacement             : 0.000137863
  Contact a-length         : 0.0202535
  Contact b-length         : 0.00246293
  Contact area             : 0.000156712
  Distance to Corner       : 0.00450714
  Effective Speed Factor   : 2.659
  Load-Life Factor         : 8.41631
                                        7
  Expected Average Life    : 1.90665 10
```

```
=========================
 Ball number          : 20
 Ball angle           : 160.
 Ball position        : {0.596722, -2.227, 0.}
 Solution current?    : Yes
 Ball activity        : ON
 Ball request         : solve
 Cross over angle          : 31.5549
 Residual Force Vector     : {-0.0693725, -0.0282938, 0.0100355}
                                        -7
 Displacement Residual     : 2.8419 10
****
 Contact name              : DpCi
  Max Normal Load          : 20.73
  Max Normal Stress        : -226683.
  Displacement             : 0.000120764
  Contact a-length         : 0.018956
  Contact b-length         : 0.00230489
  Contact area             : 0.000137261
  Distance to Corner       : 0.0058047
  Effective Speed Factor   : 2.659
  Load-Life Factor         : 10.2614
                                      7
  Expected Average Life    : 4.21326 10
****
 Contact name              : DiCi
  Max Normal Load          : 12.998
  Max Normal Stress        : -193673.
  Displacement             : 0.0000881562
  Contact a-length         : 0.0161959
  Contact b-length         : 0.00196935
  Contact area             : 0.000100202
  Distance to Corner: Dp   : 0.0100541
  Distance to Corner: Ds   : 0.0100541
  Effective Speed Factor   : 2.659
  Load-Life Factor         : 16.3656
                                      8
  Expected Average Life    : 2.72593 10
****
 Contact name              : DsCo
  Max Normal Load          : 25.3389
  Max Normal Stress        : -242387.
  Displacement             : 0.000138096
  Contact a-length         : 0.0202707
  Contact b-length         : 0.00246502
  Contact area             : 0.000156978
  Distance to Corner       : 0.00449002
  Effective Speed Factor   : 2.659
  Load-Life Factor         : 8.39499
                                      7
  Expected Average Life    : 1.8874 10
```

```
=========================
 Ball number          : 21
 Ball angle           : 150.
 Ball position        : {0.979506, -2.10056, 0.}
 Solution current?    : Yes
 Ball activity        : ON
 Ball request         : solve
 Cross over angle          : 31.4502
 Residual Force Vector     : {-0.063903, -0.0399921, 0.0098633}
                                          -7
 Displacement Residual     : 2.86857 10
****
 Contact name              : DpCi
  Max Normal Load          : 20.8078
  Max Normal Stress        : -226967.
  Displacement             : 0.000121067
  Contact a-length         : 0.0189797
  Contact b-length         : 0.00230778
  Contact area             : 0.000137605
  Distance to Corner       : 0.00578095
  Effective Speed Factor   : 2.659
  Load-Life Factor         : 10.2231
                                        7
  Expected Average Life    : 4.15062 10
****
 Contact name              : DiCi
  Max Normal Load          : 12.994
  Max Normal Stress        : -193650.
  Displacement             : 0.0000881358
  Contact a-length         : 0.016194
  Contact b-length         : 0.00196912
  Contact area             : 0.000100179
  Distance to Corner: Dp   : 0.010056
  Distance to Corner: Ds   : 0.010056
  Effective Speed Factor   : 2.659
  Load-Life Factor         : 16.3706
                                        8
  Expected Average Life    : 2.72926 10
****
 Contact name              : DsCo
  Max Normal Load          : 25.4028
  Max Normal Stress        : -242590.
  Displacement             : 0.000138328
  Contact a-length         : 0.0202877
  Contact b-length         : 0.00246708
  Contact area             : 0.000157241
  Distance to Corner       : 0.00447301
  Effective Speed Factor   : 2.659
  Load-Life Factor         : 8.37387
                                        7
  Expected Average Life    : 1.86848 10
```

```
=========================
 Ball number          : 22
 Ball angle           : 140.
 Ball position        : {1.33635, -1.90851, 0.}
 Solution current?    : Yes
 Ball activity        : ON
 Ball request         : solve
 Cross over angle          : 31.346
 Residual Force Vector     : {-0.0564603, -0.0506487, 0.00969339}
                                          -7
 Displacement Residual     : 2.8951 10
****
 Contact name              : DpCi
  Max Normal Load          : 20.8853
  Max Normal Stress        : -227250.
  Displacement             : 0.000121368
  Contact a-length         : 0.0190033
  Contact b-length         : 0.00231065
  Contact area             : 0.000137948
  Distance to Corner       : 0.00575735
  Effective Speed Factor   : 2.659
  Load-Life Factor         : 10.1852
                                        7
  Expected Average Life    : 4.08936 10
****
 Contact name              : DiCi
  Max Normal Load          : 12.9898
  Max Normal Stress        : -193626.
  Displacement             : 0.0000881143
  Contact a-length         : 0.016192
  Contact b-length         : 0.00196888
  Contact area             : 0.000100154
  Distance to Corner: Dp   : 0.010058
  Distance to Corner: Ds   : 0.010058
  Effective Speed Factor   : 2.659
  Load-Life Factor         : 16.3759
                                        8
  Expected Average Life    : 2.7328 10
****
 Contact name              : DsCo
  Max Normal Load          : 25.4665
  Max Normal Stress        : -242793.
  Displacement             : 0.000138559
  Contact a-length         : 0.0203046
  Contact b-length         : 0.00246914
  Contact area             : 0.000157503
  Distance to Corner       : 0.0044561
  Effective Speed Factor   : 2.659
  Load-Life Factor         : 8.35295
                                        7
  Expected Average Life    : 1.84988 10
```

```
=========================
 Ball number          : 23
 Ball angle           : 130.
 Ball position        : {1.65605, -1.65605, 0.}
 Solution current?    : Yes
 Ball activity        : ON
 Ball request         : solve
 Cross over angle          : 31.2421
 Residual Force Vector     : {-0.0472407, -0.0599305, 0.00952573}
                                          -7
 Displacement Residual     : 2.92152 10
****
 Contact name              : DpCi
  Max Normal Load          : 20.9625
  Max Normal Stress        : -227530.
  Displacement             : 0.000121668
  Contact a-length         : 0.0190268
  Contact b-length         : 0.0023135
  Contact area             : 0.000138288
  Distance to Corner       : 0.00573389
  Effective Speed Factor   : 2.659
  Load-Life Factor         : 10.1476
                                       7
  Expected Average Life    : 4.02944 10
****
 Contact name              : DiCi
  Max Normal Load          : 12.9853
  Max Normal Stress        : -193602.
  Displacement             : 0.0000880917
  Contact a-length         : 0.0161899
  Contact b-length         : 0.00196863
  Contact area             : 0.000100129
  Distance to Corner: Dp   : 0.0100601
  Distance to Corner: Ds   : 0.0100601
  Effective Speed Factor   : 2.659
  Load-Life Factor         : 16.3816
                                       8
  Expected Average Life    : 2.73656 10
****
 Contact name              : DsCo
  Max Normal Load          : 25.5298
  Max Normal Stress        : -242993.
  Displacement             : 0.000138788
  Contact a-length         : 0.0203214
  Contact b-length         : 0.00247118
  Contact area             : 0.000157764
  Distance to Corner       : 0.00443931
  Effective Speed Factor   : 2.659
  Load-Life Factor         : 8.33224
                                       7
  Expected Average Life    : 1.8316 10
```

```
=========================
 Ball number         : 24
 Ball angle          : 120.
 Ball position       : {1.92842, -1.35029, 0.}
 Solution current?   : Yes
 Ball activity       : ON
 Ball request        : solve
 Cross over angle         : 31.1387
 Residual Force Vector    : {-0.0364967, -0.0675411, 0.00936028}
                                                  -7
 Displacement Residual    : 2.94781 10
****
 Contact name             : DpCi
  Max Normal Load         : 21.0394
  Max Normal Stress       : -227809.
  Displacement            : 0.000121966
  Contact a-length        : 0.0190501
  Contact b-length        : 0.00231634
  Contact area            : 0.000138627
  Distance to Corner      : 0.00571057
  Effective Speed Factor  : 2.659
  Load-Life Factor        : 10.1105
                                        7
  Expected Average Life   : 3.97082 10
****
 Contact name             : DiCi
  Max Normal Load         : 12.9806
  Max Normal Stress       : -193576.
  Displacement            : 0.000088068
  Contact a-length        : 0.0161878
  Contact b-length        : 0.00196836
  Contact area            : 0.000100102
  Distance to Corner: Dp  : 0.0100622
  Distance to Corner: Ds  : 0.0100622
  Effective Speed Factor  : 2.659
  Load-Life Factor        : 16.3875
                                        8
  Expected Average Life   : 2.74051 10
****
 Contact name             : DsCo
  Max Normal Load         : 25.5928
  Max Normal Stress       : -243193.
  Displacement            : 0.000139016
  Contact a-length        : 0.0203381
  Contact b-length        : 0.00247321
  Contact area            : 0.000158023
  Distance to Corner      : 0.00442262
  Effective Speed Factor  : 2.659
  Load-Life Factor        : 8.31172
                                        7
  Expected Average Life   : 1.81362 10
```

```
=========================
 Ball number          : 25
 Ball angle           : 110.
 Ball position        : {2.14461, -1.00005, 0.}
 Solution current?    : Yes
 Ball activity        : ON
 Ball request         : solve
 Cross over angle          : 31.0357
 Residual Force Vector     : {-0.0245303, -0.0732304, 0.00919699}
                                          -7
 Displacement Residual     : 2.97397 10
****
 Contact name              : DpCi
  Max Normal Load          : 21.1161
  Max Normal Stress        : -228086.
  Displacement             : 0.000122263
  Contact a-length         : 0.0190733
  Contact b-length         : 0.00231916
  Contact area             : 0.000138965
  Distance to Corner       : 0.00568739
  Effective Speed Factor   : 2.659
  Load-Life Factor         : 10.0738
                                        7
  Expected Average Life    : 3.91346 10
****
 Contact name              : DiCi
  Max Normal Load          : 12.9757
  Max Normal Stress        : -193548.
  Displacement             : 0.0000880433
  Contact a-length         : 0.0161855
  Contact b-length         : 0.00196809
  Contact area             : 0.000100074
  Distance to Corner: Dp   : 0.0100645
  Distance to Corner: Ds   : 0.0100645
  Effective Speed Factor   : 2.659
  Load-Life Factor         : 16.3937
                                        8
  Expected Average Life    : 2.74467 10
****
 Contact name              : DsCo
  Max Normal Load          : 25.6555
  Max Normal Stress        : -243391.
  Displacement             : 0.000139243
  Contact a-length         : 0.0203546
  Contact b-length         : 0.00247523
  Contact area             : 0.000158281
  Distance to Corner       : 0.00440603
  Effective Speed Factor   : 2.659
  Load-Life Factor         : 8.2914
                                        7
  Expected Average Life    : 1.79596 10
```

```
==========================
 Ball number          : 26
 Ball angle           : 100.
 Ball position        : {2.29743, -0.615594, 0.}
 Solution current?    : Yes
 Ball activity        : ON
 Ball request         : solve
 Cross over angle          : 30.9332
 Residual Force Vector     : {-0.0116846, -0.0768026, 0.00903583}
                                                  -7
 Displacement Residual     : 2.99999 10
****
 Contact name              : DpCi
  Max Normal Load          : 21.1925
  Max Normal Stress        : -228362.
  Displacement             : 0.000122559
  Contact a-length         : 0.0190963
  Contact b-length         : 0.00232196
  Contact area             : 0.000139301
  Distance to Corner       : 0.00566436
  Effective Speed Factor   : 2.659
  Load-Life Factor         : 10.0375
                                        7
  Expected Average Life    : 3.85735 10
****
 Contact name              : DiCi
  Max Normal Load          : 12.9706
  Max Normal Stress        : -193520.
  Displacement             : 0.0000880175
  Contact a-length         : 0.0161831
  Contact b-length         : 0.0019678
  Contact area             : 0.000100044
  Distance to Corner: Dp   : 0.0100669
  Distance to Corner: Ds   : 0.0100669
  Effective Speed Factor   : 2.659
  Load-Life Factor         : 16.4002
                                        8
  Expected Average Life    : 2.74904 10
****
 Contact name              : DsCo
  Max Normal Load          : 25.7179
  Max Normal Stress        : -243588.
  Displacement             : 0.000139469
  Contact a-length         : 0.0203711
  Contact b-length         : 0.00247723
  Contact area             : 0.000158537
  Distance to Corner       : 0.00438956
  Effective Speed Factor   : 2.659
  Load-Life Factor         : 8.27128
                                        7
  Expected Average Life    : 1.77858 10
```

```
=========================
 Ball number          : 27
 Ball angle           : 90.
 Ball position        : {2.38153, -0.208357, 0.}
 Solution current?    : Yes
 Ball activity        : ON
 Ball request         : solve
 Cross over angle          : 30.8311
 Residual Force Vector     : {0.00166613, -0.0781234, 0.00887676}
                                                  -7
 Displacement Residual     : 3.02589 10
****
 Contact name              : DpCi
  Max Normal Load          : 21.2686
  Max Normal Stress        : -228636.
  Displacement             : 0.000122853
  Contact a-length         : 0.0191192
  Contact b-length         : 0.00232474
  Contact area             : 0.000139635
  Distance to Corner       : 0.00564146
  Effective Speed Factor   : 2.659
  Load-Life Factor         : 10.0016
                                        7
  Expected Average Life    : 3.80243 10
****
 Contact name              : DiCi
  Max Normal Load          : 12.9652
  Max Normal Stress        : -193491.
  Displacement             : 0.0000879907
  Contact a-length         : 0.0161806
  Contact b-length         : 0.0019675
  Contact area             : 0.000100014
  Distance to Corner: Dp   : 0.0100694
  Distance to Corner: Ds   : 0.0100694
  Effective Speed Factor   : 2.659
  Load-Life Factor         : 16.407
                                        8
  Expected Average Life    : 2.75361 10
****
 Contact name              : DsCo
  Max Normal Load          : 25.78
  Max Normal Stress        : -243784.
  Displacement             : 0.000139693
  Contact a-length         : 0.0203875
  Contact b-length         : 0.00247922
  Contact area             : 0.000158792
  Distance to Corner       : 0.00437318
  Effective Speed Factor   : 2.659
  Load-Life Factor         : 8.25135
                                        7
  Expected Average Life    : 1.7615 10
```

```
=========================
 Ball number          : 28
 Ball angle           : 80.
 Ball position        : {2.39363, 0.209416, 0.}
 Solution current?    : Yes
 Ball activity        : ON
 Ball request         : solve
 Cross over angle          : 30.7294
 Residual Force Vector     : {0.0151273, -0.0771244, 0.00871974}
                                          -7
 Displacement Residual     : 3.05165 10
****
 Contact name              : DpCi
  Max Normal Load          : 21.3444
  Max Normal Stress        : -228908.
  Displacement             : 0.000123145
  Contact a-length         : 0.019142
  Contact b-length         : 0.00232751
  Contact area             : 0.000139968
  Distance to Corner       : 0.00561871
  Effective Speed Factor   : 2.659
  Load-Life Factor         : 9.96607
                                        7
  Expected Average Life    : 3.74869 10
****
 Contact name              : DiCi
  Max Normal Load          : 12.9596
  Max Normal Stress        : -193460.
  Displacement             : 0.0000879629
  Contact a-length         : 0.0161781
  Contact b-length         : 0.00196719
  Contact area             : 0.0000999823
  Distance to Corner: Dp   : 0.0100719
  Distance to Corner: Ds   : 0.0100719
  Effective Speed Factor   : 2.659
  Load-Life Factor         : 16.4141
                                        8
  Expected Average Life    : 2.75838 10
****
 Contact name              : DsCo
  Max Normal Load          : 25.8418
  Max Normal Stress        : -243979.
  Displacement             : 0.000139916
  Contact a-length         : 0.0204038
  Contact b-length         : 0.0024812
  Contact area             : 0.000159046
  Distance to Corner       : 0.00435692
  Effective Speed Factor   : 2.659
  Load-Life Factor         : 8.23161
                                        7
  Expected Average Life    : 1.74471 10
```

```
==========================
 Ball number          : 29
 Ball angle           : 70.
 Ball position        : {2.33264, 0.62503, 0.}
 Solution current?    : Yes
 Ball activity        : ON
 Ball request         : solve
 Cross over angle          : 30.6281
 Residual Force Vector     : {0.0282959, -0.0738064, 0.00856473}
                                                  -7
 Displacement Residual     : 3.07727 10
****
 Contact name              : DpCi
  Max Normal Load          : 21.42
  Max Normal Stress        : -229178.
  Displacement             : 0.000123436
  Contact a-length         : 0.0191646
  Contact b-length         : 0.00233026
  Contact area             : 0.000140298
  Distance to Corner       : 0.00559609
  Effective Speed Factor   : 2.659
  Load-Life Factor         : 9.93092
                                       7
  Expected Average Life    : 3.69608 10
****
 Contact name              : DiCi
  Max Normal Load          : 12.9537
  Max Normal Stress        : -193428.
  Displacement             : 0.000087934
  Contact a-length         : 0.0161754
  Contact b-length         : 0.00196687
  Contact area             : 0.0000999496
  Distance to Corner: Dp   : 0.0100746
  Distance to Corner: Ds   : 0.0100746
  Effective Speed Factor   : 2.659
  Load-Life Factor         : 16.4215
                                       8
  Expected Average Life    : 2.76335 10
****
 Contact name              : DsCo
  Max Normal Load          : 25.9034
  Max Normal Stress        : -244172.
  Displacement             : 0.000140138
  Contact a-length         : 0.0204199
  Contact b-length         : 0.00248317
  Contact area             : 0.000159298
  Distance to Corner       : 0.00434075
  Effective Speed Factor   : 2.659
  Load-Life Factor         : 8.21206
                                       7
  Expected Average Life    : 1.72819 10
```

```
=========================
 Ball number          : 30
 Ball angle           : 60.
 Ball position        : {2.19968, 1.02573, 0.}
 Solution current?    : Yes
 Ball activity        : ON
 Ball request         : solve
 Cross over angle          : 30.5272
 Residual Force Vector     : {0.0407723, -0.0682405, 0.00841171}
                                                  -7
 Displacement Residual     : 3.10275 10
****
 Contact name              : DpCi
  Max Normal Load          : 21.4952
  Max Normal Stress        : -229447.
  Displacement             : 0.000123726
  Contact a-length         : 0.0191871
  Contact b-length         : 0.00233299
  Contact area             : 0.000140628
  Distance to Corner       : 0.00557361
  Effective Speed Factor   : 2.659
  Load-Life Factor         : 9.89615
                                        7
  Expected Average Life    : 3.64459 10
****
 Contact name              : DiCi
  Max Normal Load          : 12.9477
  Max Normal Stress        : -193396.
  Displacement             : 0.0000879042
  Contact a-length         : 0.0161727
  Contact b-length         : 0.00196653
  Contact area             : 0.0000999157
  Distance to Corner: Dp   : 0.0100773
  Distance to Corner: Ds   : 0.0100773
  Effective Speed Factor   : 2.659
  Load-Life Factor         : 16.4292
                                        8
  Expected Average Life    : 2.76852 10
****
 Contact name              : DsCo
  Max Normal Load          : 25.9646
  Max Normal Stress        : -244364.
  Displacement             : 0.000140358
  Contact a-length         : 0.020436
  Contact b-length         : 0.00248512
  Contact area             : 0.000159549
  Distance to Corner       : 0.00432469
  Effective Speed Factor   : 2.659
  Load-Life Factor         : 8.19269
                                        7
  Expected Average Life    : 1.71195 10
```

```
=========================
 Ball number          : 31
 Ball angle           : 50.
 Ball position        : {1.99811, 1.39909, 0.}
 Solution current?    : Yes
 Ball activity        : ON
 Ball request         : solve
 Cross over angle         : 30.4268
 Residual Force Vector    : {0.0521727, -0.0605664, 0.00826064}
                                                  -7
 Displacement Residual    : 3.12809 10
****
 Contact name             : DpCi
  Max Normal Load         : 21.5702
  Max Normal Stress       : -229714.
  Displacement            : 0.000124014
  Contact a-length        : 0.0192094
  Contact b-length        : 0.0023357
  Contact area            : 0.000140955
  Distance to Corner      : 0.00555127
  Effective Speed Factor  : 2.659
  Load-Life Factor        : 9.86175
                                     7
  Expected Average Life   : 3.59418 10
****
 Contact name             : DiCi
  Max Normal Load         : 12.9414
  Max Normal Stress       : -193362.
  Displacement            : 0.0000878734
  Contact a-length        : 0.0161699
  Contact b-length        : 0.00196619
  Contact area            : 0.0000998806
  Distance to Corner: Dp  : 0.0100801
  Distance to Corner: Ds  : 0.0100801
  Effective Speed Factor  : 2.659
  Load-Life Factor        : 16.4371
                                     8
  Expected Average Life   : 2.77389 10
****
 Contact name             : DsCo
  Max Normal Load         : 26.0255
  Max Normal Stress       : -244555.
  Displacement            : 0.000140577
  Contact a-length        : 0.0204519
  Contact b-length        : 0.00248706
  Contact area            : 0.000159798
  Distance to Corner      : 0.00430873
  Effective Speed Factor  : 2.659
  Load-Life Factor        : 8.17351
                                     7
  Expected Average Life   : 1.69597 10
```

```
==========================
 Ball number          : 32
 Ball angle           : 40.
 Ball position        : {1.73339, 1.73339, 0.}
 Solution current?    : Yes
 Ball activity        : ON
 Ball request         : solve
 Cross over angle          : 30.3268
 Residual Force Vector     : {0.0621409, -0.0509896, 0.00811149}
                                                  -7
 Displacement Residual     : 3.15328 10
****
 Contact name              : DpCi
  Max Normal Load          : 21.6449
  Max Normal Stress        : -229980.
  Displacement             : 0.000124301
  Contact a-length         : 0.0192316
  Contact b-length         : 0.0023384
  Contact area             : 0.000141281
  Distance to Corner       : 0.00552907
  Effective Speed Factor   : 2.659
  Load-Life Factor         : 9.82772
                                       7
  Expected Average Life    : 3.54482 10
****
 Contact name              : DiCi
  Max Normal Load          : 12.9349
  Max Normal Stress        : -193327.
  Displacement             : 0.0000878416
  Contact a-length         : 0.0161669
  Contact b-length         : 0.00196583
  Contact area             : 0.0000998445
  Distance to Corner: Dp   : 0.0100831
  Distance to Corner: Ds   : 0.0100831
  Effective Speed Factor   : 2.659
  Load-Life Factor         : 16.4454
                                       8
  Expected Average Life    : 2.77946 10
****
 Contact name              : DsCo
  Max Normal Load          : 26.0862
  Max Normal Stress        : -244744.
  Displacement             : 0.000140796
  Contact a-length         : 0.0204678
  Contact b-length         : 0.00248899
  Contact area             : 0.000160046
  Distance to Corner       : 0.00429288
  Effective Speed Factor   : 2.659
  Load-Life Factor         : 8.15451
                                       7
  Expected Average Life    : 1.68026 10
```

```
==========================
 Ball number          : 33
 Ball angle           : 30.
 Ball position        : {1.41303, 2.01802, 0.}
 Solution current?    : Yes
 Ball activity        : ON
 Ball request         : solve
 Cross over angle          : 30.2272
 Residual Force Vector     : {0.0703598, -0.0397757, 0.00796423}
                                          -7
 Displacement Residual     : 3.17833 10
****
 Contact name              : DpCi
  Max Normal Load          : 21.7193
  Max Normal Stress        : -230244.
  Displacement             : 0.000124587
  Contact a-length         : 0.0192537
  Contact b-length         : 0.00234109
  Contact area             : 0.000141606
  Distance to Corner       : 0.005507
  Effective Speed Factor   : 2.659
  Load-Life Factor         : 9.79405
                                        7
  Expected Average Life    : 3.49649 10
****
 Contact name              : DiCi
  Max Normal Load          : 12.9282
  Max Normal Stress        : -193291.
  Displacement             : 0.0000878089
  Contact a-length         : 0.0161639
  Contact b-length         : 0.00196547
  Contact area             : 0.0000998073
  Distance to Corner: Dp   : 0.0100861
  Distance to Corner: Ds   : 0.0100861
  Effective Speed Factor   : 2.659
  Load-Life Factor         : 16.4539
                                        8
  Expected Average Life    : 2.78522 10
****
 Contact name              : DsCo
  Max Normal Load          : 26.1465
  Max Normal Stress        : -244933.
  Displacement             : 0.000141012
  Contact a-length         : 0.0204836
  Contact b-length         : 0.00249091
  Contact area             : 0.000160292
  Distance to Corner       : 0.00427712
  Effective Speed Factor   : 2.659
  Load-Life Factor         : 8.13569
                                        7
  Expected Average Life    : 1.6648 10
```

```
=========================
 Ball number          : 34
 Ball angle           : 20.
 Ball position        : {1.04627, 2.24374, 0.}
 Solution current?    : Yes
 Ball activity        : ON
 Ball request         : solve
 Cross over angle          : 30.128
 Residual Force Vector     : {0.0765608, -0.027243, 0.00781883}
                                                  -7
 Displacement Residual     : 3.20323 10
****
 Contact name              : DpCi
  Max Normal Load          : 21.7934
  Max Normal Stress        : -230506.
  Displacement             : 0.000124871
  Contact a-length         : 0.0192756
  Contact b-length         : 0.00234375
  Contact area             : 0.000141929
  Distance to Corner       : 0.00548507
  Effective Speed Factor   : 2.659
  Load-Life Factor         : 9.76074
                                       7
  Expected Average Life    : 3.44916 10
****
 Contact name              : DiCi
  Max Normal Load          : 12.9213
  Max Normal Stress        : -193254.
  Displacement             : 0.0000877752
  Contact a-length         : 0.0161608
  Contact b-length         : 0.00196509
  Contact area             : 0.000099769
  Distance to Corner: Dp   : 0.0100892
  Distance to Corner: Ds   : 0.0100892
  Effective Speed Factor   : 2.659
  Load-Life Factor         : 16.4627
                                       8
  Expected Average Life    : 2.79118 10
****
 Contact name              : DsCo
  Max Normal Load          : 26.2066
  Max Normal Stress        : -245120.
  Displacement             : 0.000141228
  Contact a-length         : 0.0204992
  Contact b-length         : 0.00249281
  Contact area             : 0.000160537
  Distance to Corner       : 0.00426147
  Effective Speed Factor   : 2.659
  Load-Life Factor         : 8.11705
                                       7
  Expected Average Life    : 1.64959 10
```

```
=========================
 Ball number          : 35
 Ball angle           : 10.
 Ball position        : {0.643902, 2.40308, 0.}
 Solution current?    : Yes
 Ball activity        : ON
 Ball request         : solve
 Cross over angle          : 30.0293
 Residual Force Vector     : {0.0805337, -0.0137539, 0.00767527}
                                                  -7
 Displacement Residual     : 3.22798 10
****
 Contact name              : DpCi
  Max Normal Load          : 21.8673
  Max Normal Stress        : -230767.
  Displacement             : 0.000125153
  Contact a-length         : 0.0192974
  Contact b-length         : 0.0023464
  Contact area             : 0.00014225
  Distance to Corner       : 0.00546327
  Effective Speed Factor   : 2.659
  Load-Life Factor         : 9.72778
                                      7
  Expected Average Life    : 3.40281 10
****
 Contact name              : DiCi
  Max Normal Load          : 12.9142
  Max Normal Stress        : -193215.
  Displacement             : 0.0000877406
  Contact a-length         : 0.0161576
  Contact b-length         : 0.0019647
  Contact area             : 0.0000997297
  Distance to Corner: Dp   : 0.0100924
  Distance to Corner: Ds   : 0.0100924
  Effective Speed Factor   : 2.659
  Load-Life Factor         : 16.4718
                                      8
  Expected Average Life    : 2.79734 10
****
 Contact name              : DsCo
  Max Normal Load          : 26.2663
  Max Normal Stress        : -245306.
  Displacement             : 0.000141442
  Contact a-length         : 0.0205148
  Contact b-length         : 0.0024947
  Contact area             : 0.000160781
  Distance to Corner       : 0.00424591
  Effective Speed Factor   : 2.659
  Load-Life Factor         : 8.09858
                                      7
  Expected Average Life    : 1.63463 10
```

```
=========================
 Ball number          : 36
 Ball angle           : 0.
 Ball position        : {0.217889, 2.49049, 0.}
 Solution current?    : Yes
 Ball activity        : ON
 Ball request         : solve
 Cross over angle         : 37.1407
 Residual Force Vector    : {0.557705, 0.199261, -0.143309}
                                                    -6
 Displacement Residual    : 2.43194 10
****
 Contact name             : DpCo
  Max Normal Load         : 19.9461
  Max Normal Stress       : -224878.
  Displacement            : 0.000118859
  Contact a-length        : 0.0188058
  Contact b-length        : 0.00228679
  Contact area            : 0.000135104
  Distance to Corner      : 0.00595484
  Effective Speed Factor  : 2.659
  Load-Life Factor        : 10.6647
                                      7
  Expected Average Life   : 4.91565 10
****
 Contact name             : DiCi
  Max Normal Load         : 14.974
  Max Normal Stress       : -201066.
  Displacement            : 0.0000950156
  Contact a-length        : 0.0168142
  Contact b-length        : 0.00204453
  Contact area            : 0.000107999
  Distance to Corner: Dp  : 0.00943585
  Distance to Corner: Ds  : 0.00943585
  Effective Speed Factor  : 2.659
  Load-Life Factor        : 14.206
                                      8
  Expected Average Life   : 1.54762 10
****
 Contact name             : DsCi
  Max Normal Load         : 24.2275
  Max Normal Stress       : -238991.
  Displacement            : 0.000134225
  Contact a-length        : 0.0199846
  Contact b-length        : 0.00242986
  Contact area            : 0.000152555
  Distance to Corner      : 0.00477609
  Effective Speed Factor  : 2.659
  Load-Life Factor        : 8.78009
                                      7
  Expected Average Life   : 2.25829 10
```

```
=========================
Summary of Performance
=========================

 Applied Angular Twist (degrees) : 0.395194

 Total Internal Loads (Fx,Fy,Fz)
 Primary Disk                    : {-330.919, 60.102, -505.545}
 Intermediate Disk               : {12.0743, -23.0543, -23.7645}
 Secondary Disk                  : {319.988, -41.609, 531.859}

 Total Axial Torque (Tz)
 Primary Disk                    : 31.7733
 Intermediate Disk               : 1190.9
 Secondary Disk                  : -1200.

 Torque Ratio: Ds/Dp             : 37.7675
 Torque Ratio: Di/Dp             : 37.4811
 Torque Ratio: Di/Ds             : 0.992416

 Tosional Stiffness (T/rad)      : 173977.

 Average Residual Force          : {-0.0317412, 0.126704, -0.0708137}
                                          -6
 Average Displacement Residual   : 1.21371 10

 Dp Speed                        : 10.
 Ds Speed                        : 0.27027
 Speed Conversion Ratio          : 37.
 Effective N.D. Speed            : 20.
 Minimum Expected Average Life
                                            7
                          hours  : 3.40281 10
                          years  : 3884.49

  Average Load-Life Factor: Dp   : 10.5036
  Average Load-Life Factor: Di   : 15.3547
  Average Load-Life Factor: Ds   : 8.6056
```

```
==========================
Summary of Extreme Values
==========================

 Maximum Compressive Contact Stress Dp : -230767.
 At ball number                        : 35
 Maximum Compressive Contact Stress Di : -201066.
 At ball number                        : 36
 Maximum Compressive Contact Stress Ds : -238991.
 At ball number                        : 36

 Maximum Ball Deflection Dp            : 0.000125153
 At ball number                        : 35
 Maximum Ball Deflection Di            : 0.0000950156
 At ball number                        : 36
 Maximum Ball Deflection Ds            : 0.000141442
 At ball number                        : 35

 Maximum Ball Contact Area Dp          : 0.00014225
 At ball number                        : 35
 Maximum Ball Contact Area Di          : 0.000107999
 At ball number                        : 36
 Maximum Ball Contact Area Ds          : 0.000160781
 At ball number                        : 35

 Maximum Ball a-patch Dp               : 0.0192974
 At ball number                        : 35
 Maximum Ball a-patch Di               : 0.0168142
 At ball number                        : 36
 Maximum Ball a-patch Ds               : 0.0205148
 At ball number                        : 35

 Maximum Ball b-patch Dp               : 0.0023464
 At ball number                        : 35
 Maximum Ball b-patch Di               : 0.00204453
 At ball number                        : 36
 Maximum Ball b-patch Ds               : 0.0024947
 At ball number                        : 35

 Minimum Distance to Dp Corner         : 0.00546327
 At ball number                        : 35
 Minimum Distance to Di Corner: Dp     : 0.00943585
 At ball number                        : 36
 Minimum Distance to Di Corner: Ds     : 0.00943585
 At ball number                        : 36
 Minimum Distance to Ds Corner         : 0.00424591
 At ball number                        : 35

==========================
==========================
```

SYNKdrive^{tm} Speed Conversion Technology

Analytical and Numerical Results

Precision Speed Reducer for Robotics and Manufacturing
(TRP-93-009)

Conforming Race Design
Conforming Percentage: 52%
Flank Angle: 45 degrees
Applied Torque: 1200 in-lbs

1.0 Geometric Definition

```
Summary of Conforming Race Parameters
-------------------------------------
BallDiameter                    = 0.15625

ConformingDiameter              = 0.1625
ConformingPercentage            = 52.

PrimaryFlankAngleDegrees        = 45.
IntermediateFlankAngleDegrees   = 0.
SecondaryFlankAngleDegrees      = 45.

PrimaryFractionBallDepth        = 0.3
SecondaryFractionBallDepth      = 0.3

ToleranceFraction               = 0.01

ContactToCornerDistance for Dp = 0.0339308
ContactToCornerDistance for Ds = 0.0339308
```

```
Summary of Primary Disk Parameters
----------------------------------
PrimaryDiskThickness            = 0.5
PrimaryDiskDiameter             = 6.

PrimaryRadiusMax                = 2.5
PrimaryRadiusMin                = 2.28125
PrimaryDisplacement             = 0.21875

PrimaryPhiIncrement             = 180.
PrimaryNumberLobes              = 1


Summary of Intermediate Disk Parameters
---------------------------------------
IntermediateDiskThickness       = 0.0525
IntermediateDiskDiameter        = 6.

IntermediateRadiusMax           = 2.5
IntermediateRadiusMin           = 2.28125
IntermediateDisplacement        = 0.21875
IntermediateSlotWidth           = 0.15625

IntermediateTotalSlots          = 36
IntermediateGammaIncrement      = 10.


Summary of Secondary Disk Parameters
------------------------------------
SecondaryDiskThickness          = 0.5
SecondaryDiskDiameter           = 6.

SecondaryRadiusMax              = 2.5
SecondaryRadiusMin              = 2.28125
SecondaryDisplacement           = 0.21875

SecondaryPhiIncrement           = 4.86486
SecondaryNumberLobes            = 37
```

2.0 Ball Race Section Profile

Primary and Secondary Race Profiles

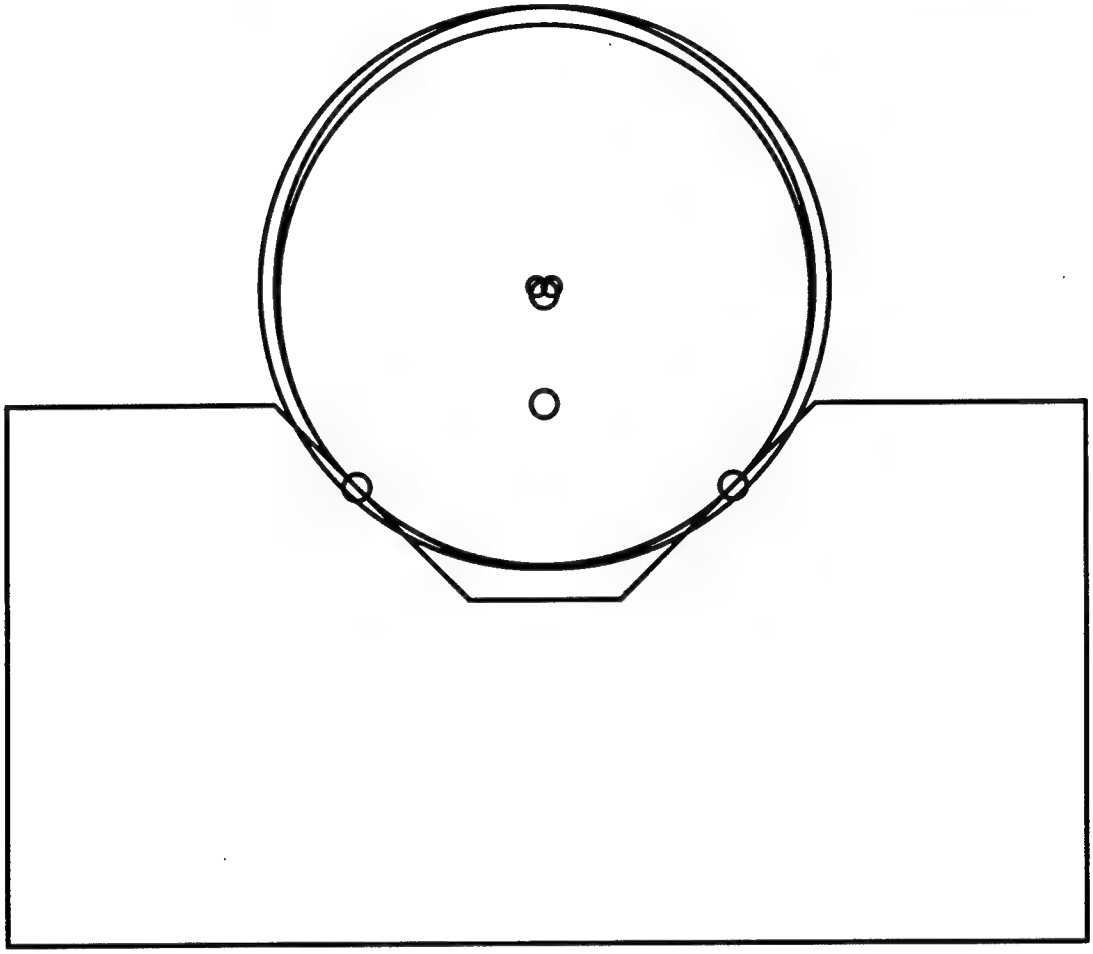

3.0 Constraints and Kinematic Results

```
Summary of Drive Constraint Parameters
--------------------------------------
PrimaryNumberLobes              = 1
SecondaryNumberLobes            = 37
IntermediateTotalSlots          = 36 (requested balls)

BallConjugateDirection          = forward drive
BallConstraintCondition         = exactly constrained

Conjugate constraints           = 36
Forward drive condition         = 36
Reverser drive condition        = 38
Predicted speed ratio           = 37 to 1


Summary of Kinematic Solver Results
---------------------------------------
PrimaryAngleStart               = 0.
PrimaryAngleFinish              = 5.
PrimaryAngleDelta               = 1.
PrimaryAngleNumber              = 6.
Speed Conversion Ratio (Dp:Ds) = 37. to 1

PrimaryDiskDeltaAngle:
   Step          Dp Angle          Ds Angle
   ----          --------          --------
                                           -17
    1              0.              2.77556 10
    2              1.              0.027027
    3              2.              0.0540541
    4              3.              0.0810811
    5              4.              0.108108
    6              5.              0.135135
```

4.0 Numerical Results

```
================================================
Summary of Stress and Displacement Calculations
================================================
 Calculated for kinematic solution : 6
 Angular Deformation               : 0.441531
 Applied Torque                    : 1199.99
```

```
==========================
 Ball number          : 1
 Ball angle           : 350.
 Ball position        : {-0.21683, 2.47838, 0.}
 Solution current?    : Yes
 Ball activity        : ON
 Ball request         : solve
 Cross over angle          : 34.2798
 Residual Force Vector     : {0.604874, 0.200643, -0.0454489}
                                        -6
 Displacement Residual     : 2.45684 10
****
 Contact name              : DpCo
  Max Normal Load          : 22.4125
  Max Normal Stress        : -233383.
  Displacement             : 0.000128019
  Contact a-length         : 0.0195171
  Contact b-length         : 0.00237328
  Contact area             : 0.000145517
  Distance to Corner       : 0.0144137
  Effective Speed Factor   : 2.659
  Load-Life Factor         : 9.49115
                                       7
  Expected Average Life    : 3.08361 10
****
 Contact name              : DiCi
  Max Normal Load          : 15.1178
  Max Normal Stress        : -201541.
  Displacement             : 0.0000954651
  Contact a-length         : 0.0168539
  Contact b-length         : 0.00204936
  Contact area             : 0.00010851
  Distance to Corner: Dp   : 0.00939612
  Distance to Corner: Ds   : 0.00939612
  Effective Speed Factor   : 2.659
  Load-Life Factor         : 14.0708
                                       8
  Expected Average Life    : 1.48956 10
****
 Contact name              : DsCi
  Max Normal Load          : 26.2019
  Max Normal Stress        : -245535.
  Displacement             : 0.000141676
  Contact a-length         : 0.0205318
  Contact b-length         : 0.00249639
  Contact area             : 0.000161023
  Distance to Corner       : 0.013399
  Effective Speed Factor   : 2.659
  Load-Life Factor         : 8.11848
                                       7
  Expected Average Life    : 1.65076 10
```

```
=========================
 Ball number          : 2
 Ball angle           : 340.
 Ball position        : {-0.640757, 2.39134, 0.}
 Solution current?    : Yes
 Ball activity        : ON
 Ball request         : solve
 Cross over angle          : 34.3688
 Residual Force Vector     : {0.551484, 0.300355, -0.047294}
                                          -6
 Displacement Residual     : 2.42432 10
****
 Contact name              : DpCo
  Max Normal Load          : 22.3461
  Max Normal Stress        : -233151.
  Displacement             : 0.000127765
  Contact a-length         : 0.0194977
  Contact b-length         : 0.00237092
  Contact area             : 0.000145228
  Distance to Corner       : 0.0144331
  Effective Speed Factor   : 2.659
  Load-Life Factor         : 9.51933
                                        7
  Expected Average Life    : 3.1204 10
****
 Contact name              : DiCi
  Max Normal Load          : 15.1111
  Max Normal Stress        : -201546.
  Displacement             : 0.0000954696
  Contact a-length         : 0.0168543
  Contact b-length         : 0.00204941
  Contact area             : 0.000108515
  Distance to Corner: Dp   : 0.00939573
  Distance to Corner: Ds   : 0.00939573
  Effective Speed Factor   : 2.659
  Load-Life Factor         : 14.0771
                                          8
  Expected Average Life    : 1.49223 10
****
 Contact name              : DsCi
  Max Normal Load          : 26.1505
  Max Normal Stress        : -245364.
  Displacement             : 0.000141479
  Contact a-length         : 0.0205175
  Contact b-length         : 0.00249465
  Contact area             : 0.000160799
  Distance to Corner       : 0.0134133
  Effective Speed Factor   : 2.659
  Load-Life Factor         : 8.13445
                                        7
  Expected Average Life    : 1.66378 10
```

```
==========================
 Ball number          : 3
 Ball angle           : 330.
 Ball position        : {-1.04114, 2.23273, 0.}
 Solution current?    : Yes
 Ball activity        : ON
 Ball request         : solve
 Cross over angle          : 34.4582
 Residual Force Vector     : {0.482145, 0.387664, -0.0491132}
                                          -6
 Displacement Residual     : 2.39182 10
****
 Contact name              : DpCo
  Max Normal Load          : 22.2795
  Max Normal Stress        : -232917.
  Displacement             : 0.000127509
  Contact a-length         : 0.0194782
  Contact b-length         : 0.00236855
  Contact area             : 0.000144937
  Distance to Corner       : 0.0144527
  Effective Speed Factor   : 2.659
  Load-Life Factor         : 9.54778
                                        7
  Expected Average Life    : 3.15786 10
****
 Contact name              : DiCi
  Max Normal Load          : 15.1041
  Max Normal Stress        : -201550.
  Displacement             : 0.0000954732
  Contact a-length         : 0.0168546
  Contact b-length         : 0.00204945
  Contact area             : 0.000108519
  Distance to Corner: Dp   : 0.0093954
  Distance to Corner: Ds   : 0.0093954
  Effective Speed Factor   : 2.659
  Load-Life Factor         : 14.0836
                                        8
  Expected Average Life    : 1.49497 10
****
 Contact name              : DsCi
  Max Normal Load          : 26.0988
  Max Normal Stress        : -245192.
  Displacement             : 0.000141281
  Contact a-length         : 0.0205031
  Contact b-length         : 0.0024929
  Contact area             : 0.000160574
  Distance to Corner       : 0.0134277
  Effective Speed Factor   : 2.659
  Load-Life Factor         : 8.15056
                                        7
  Expected Average Life    : 1.67701 10
```

```
==========================
 Ball number          : 4
 Ball angle           : 320.
 Ball position        : {-1.40606, 2.00806, 0.}
 Solution current?    : Yes
 Ball activity        : ON
 Ball request         : solve
 Cross over angle          : 34.5479
 Residual Force Vector     : {0.39953, 0.460112, -0.0509058}
                                          -6
 Displacement Residual     : 2.35934 10
****
 Contact name              : DpCo
  Max Normal Load          : 22.2127
  Max Normal Stress        : -232683.
  Displacement             : 0.000127252
  Contact a-length         : 0.0194585
  Contact b-length         : 0.00236616
  Contact area             : 0.000144645
  Distance to Corner       : 0.0144723
  Effective Speed Factor   : 2.659
  Load-Life Factor         : 9.57649
                                        7
  Expected Average Life    : 3.19602 10
****
 Contact name              : DiCi
  Max Normal Load          : 15.097
  Max Normal Stress        : -201553.
  Displacement             : 0.0000954761
  Contact a-length         : 0.0168549
  Contact b-length         : 0.00204948
  Contact area             : 0.000108522
  Distance to Corner: Dp   : 0.00939515
  Distance to Corner: Ds   : 0.00939515
  Effective Speed Factor   : 2.659
  Load-Life Factor         : 14.0902
                                        8
  Expected Average Life    : 1.4978 10
****
 Contact name              : DsCi
  Max Normal Load          : 26.0468
  Max Normal Stress        : -245019.
  Displacement             : 0.000141081
  Contact a-length         : 0.0204886
  Contact b-length         : 0.00249115
  Contact area             : 0.000160348
  Distance to Corner       : 0.0134422
  Effective Speed Factor   : 2.659
  Load-Life Factor         : 8.16682
                                        7
  Expected Average Life    : 1.69043 10
```

```
=========================
 Ball number          : 5
 Ball angle           : 310.
 Ball position        : {-1.7248, 1.7248, 0.}
 Solution current?    : Yes
 Ball activity        : ON
 Ball request         : solve
 Cross over angle          : 34.638
 Residual Force Vector     : {0.306674, 0.515793, -0.052671}
                                                  -6
 Displacement Residual     : 2.32689 10
****
 Contact name              : DpCo
  Max Normal Load          : 22.1457
  Max Normal Stress        : -232447.
  Displacement             : 0.000126994
  Contact a-length         : 0.0194388
  Contact b-length         : 0.00236376
  Contact area             : 0.000144352
  Distance to Corner       : 0.014492
  Effective Speed Factor   : 2.659
  Load-Life Factor         : 9.60548
                                       7
  Expected Average Life    : 3.23489 10
****
 Contact name              : DiCi
  Max Normal Load          : 15.0897
  Max Normal Stress        : -201555.
  Displacement             : 0.0000954782
  Contact a-length         : 0.016855
  Contact b-length         : 0.0020495
  Contact area             : 0.000108525
  Distance to Corner: Dp   : 0.00939496
  Distance to Corner: Ds   : 0.00939496
  Effective Speed Factor   : 2.659
  Load-Life Factor         : 14.097
                                       8
  Expected Average Life    : 1.5007 10
****
 Contact name              : DsCi
  Max Normal Load          : 25.9946
  Max Normal Stress        : -244845.
  Displacement             : 0.000140881
  Contact a-length         : 0.0204741
  Contact b-length         : 0.00248938
  Contact area             : 0.00016012
  Distance to Corner       : 0.0134567
  Effective Speed Factor   : 2.659
  Load-Life Factor         : 8.18323
                                       7
  Expected Average Life    : 1.70405 10
```

```
==========================
 Ball number          : 6
 Ball angle           : 300.
 Ball position        : {-1.98815, 1.39212, 0.}
 Solution current?    : Yes
 Ball activity        : ON
 Ball request         : solve
 Cross over angle          : 34.7284
 Residual Force Vector     : {0.206861, 0.553397, -0.0544083}
                                          -6
 Displacement Residual     : 2.29447 10
****
 Contact name              : DpCo
  Max Normal Load          : 22.0784
  Max Normal Stress        : -232209.
  Displacement             : 0.000126735
  Contact a-length         : 0.019419
  Contact b-length         : 0.00236135
  Contact area             : 0.000144057
  Distance to Corner       : 0.0145119
  Effective Speed Factor   : 2.659
  Load-Life Factor         : 9.63474
                                        7
  Expected Average Life    : 3.27449 10
****
 Contact name              : DiCi
  Max Normal Load          : 15.0822
  Max Normal Stress        : -201556.
  Displacement             : 0.0000954794
  Contact a-length         : 0.0168551
  Contact b-length         : 0.00204952
  Contact area             : 0.000108526
  Distance to Corner: Dp   : 0.00939485
  Distance to Corner: Ds   : 0.00939485
  Effective Speed Factor   : 2.659
  Load-Life Factor         : 14.104
                                        8
  Expected Average Life    : 1.50368 10
****
 Contact name              : DsCi
  Max Normal Load          : 25.9422
  Max Normal Stress        : -244670.
  Displacement             : 0.00014068
  Contact a-length         : 0.0204595
  Contact b-length         : 0.0024876
  Contact area             : 0.000159891
  Distance to Corner       : 0.0134714
  Effective Speed Factor   : 2.659
  Load-Life Factor         : 8.19978
                                        7
  Expected Average Life    : 1.71788 10
```

```
=========================
 Ball number          : 7
 Ball angle           : 290.
 Ball position        : {-2.18867, 1.02059, 0.}
 Solution current?    : Yes
 Ball activity        : ON
 Ball request         : solve
 Cross over angle          : 34.8193
 Residual Force Vector     : {0.10351, 0.572239, -0.0561169}
                                      -6
 Displacement Residual     : 2.26208 10
****
 Contact name              : DpCo
  Max Normal Load          : 22.011
  Max Normal Stress        : -231971.
  Displacement             : 0.000126475
  Contact a-length         : 0.019399
  Contact b-length         : 0.00235892
  Contact area             : 0.000143761
  Distance to Corner       : 0.0145318
  Effective Speed Factor   : 2.659
  Load-Life Factor         : 9.66427
                                        7
  Expected Average Life    : 3.31483 10
****
 Contact name              : DiCi
  Max Normal Load          : 15.0745
  Max Normal Stress        : -201557.
  Displacement             : 0.0000954798
  Contact a-length         : 0.0168552
  Contact b-length         : 0.00204952
  Contact area             : 0.000108526
  Distance to Corner: Dp   : 0.00939482
  Distance to Corner: Ds   : 0.00939482
  Effective Speed Factor   : 2.659
  Load-Life Factor         : 14.1112
                                        8
  Expected Average Life    : 1.50675 10
****
 Contact name              : DsCi
  Max Normal Load          : 25.8894
  Max Normal Stress        : -244494.
  Displacement             : 0.000140478
  Contact a-length         : 0.0204447
  Contact b-length         : 0.00248581
  Contact area             : 0.000159661
  Distance to Corner       : 0.0134861
  Effective Speed Factor   : 2.659
  Load-Life Factor         : 8.21648
                                        7
  Expected Average Life    : 1.73192 10
```

```
=========================
 Ball number          : 8
 Ball angle           : 280.
 Ball position        : {-2.32091, 0.621885, 0.}
 Solution current?    : Yes
 Ball activity        : ON
 Ball request         : solve
 Cross over angle          : 34.9105
 Residual Force Vector     : {0.000060834, 0.572267, -0.0577961}
                                        -6
 Displacement Residual     : 2.22972 10
****
 Contact name              : DpCo
  Max Normal Load          : 21.9433
  Max Normal Stress        : -231731.
  Displacement             : 0.000126213
  Contact a-length         : 0.0193789
  Contact b-length         : 0.00235648
  Contact area             : 0.000143464
  Distance to Corner       : 0.0145519
  Effective Speed Factor   : 2.659
  Load-Life Factor         : 9.69409
                                       7
  Expected Average Life    : 3.35592 10
****
 Contact name              : DiCi
  Max Normal Load          : 15.0667
  Max Normal Stress        : -201556.
  Displacement             : 0.0000954794
  Contact a-length         : 0.0168551
  Contact b-length         : 0.00204952
  Contact area             : 0.000108526
  Distance to Corner: Dp   : 0.00939486
  Distance to Corner: Ds   : 0.00939486
  Effective Speed Factor   : 2.659
  Load-Life Factor         : 14.1186
                                       8
  Expected Average Life    : 1.50989 10
****
 Contact name              : DsCi
  Max Normal Load          : 25.8364
  Max Normal Stress        : -244317.
  Displacement             : 0.000140274
  Contact a-length         : 0.0204299
  Contact b-length         : 0.00248401
  Contact area             : 0.00015943
  Distance to Corner       : 0.0135009
  Effective Speed Factor   : 2.659
  Load-Life Factor         : 8.23334
                                       7
  Expected Average Life    : 1.74617 10
```

```
=========================
 Ball number          : 9
 Ball angle           : 270.
 Ball position        : {-2.38153, 0.208357, 0.}
 Solution current?    : Yes
 Ball activity        : ON
 Ball request         : solve
 Cross over angle          : 35.0021
 Residual Force Vector     : {-0.100142, 0.554044, -0.0594453}
                                                  -6
 Displacement Residual     : 2.19739 10
****
 Contact name              : DpCo
  Max Normal Load          : 21.8753
  Max Normal Stress        : -231489.
  Displacement             : 0.00012595
  Contact a-length         : 0.0193587
  Contact b-length         : 0.00235402
  Contact area             : 0.000143165
  Distance to Corner       : 0.0145721
  Effective Speed Factor   : 2.659
  Load-Life Factor         : 9.72419
                                       7
  Expected Average Life    : 3.39779 10
****
 Contact name              : DiCi
  Max Normal Load          : 15.0586
  Max Normal Stress        : -201555.
  Displacement             : 0.0000954781
  Contact a-length         : 0.016855
  Contact b-length         : 0.0020495
  Contact area             : 0.000108524
  Distance to Corner: Dp   : 0.00939497
  Distance to Corner: Ds   : 0.00939497
  Effective Speed Factor   : 2.659
  Load-Life Factor         : 14.1261
                                       8
  Expected Average Life    : 1.51312 10
****
 Contact name              : DsCi
  Max Normal Load          : 25.7832
  Max Normal Stress        : -244139.
  Displacement             : 0.00014007
  Contact a-length         : 0.020415
  Contact b-length         : 0.0024822
  Contact area             : 0.000159198
  Distance to Corner       : 0.0135158
  Effective Speed Factor   : 2.659
  Load-Life Factor         : 8.25034
                                       7
  Expected Average Life    : 1.76065 10
```

```
=========================
 Ball number          : 10
 Ball angle           : 260.
 Ball position        : {-2.36942, -0.207298, 0.}
 Solution current?    : Yes
 Ball activity        : ON
 Ball request         : solve
 Cross over angle          : 35.094
 Residual Force Vector     : {-0.193955, 0.518715, -0.0610636}
                                                  -6
 Displacement Residual     : 2.16511 10
****
 Contact name              : DpCo
  Max Normal Load          : 21.8072
  Max Normal Stress        : -231246.
  Displacement             : 0.000125686
  Contact a-length         : 0.0193384
  Contact b-length         : 0.00235155
  Contact area             : 0.000142865
  Distance to Corner       : 0.0145924
  Effective Speed Factor   : 2.659
  Load-Life Factor         : 9.75457
                                       7
  Expected Average Life    : 3.44046 10
****
 Contact name              : DiCi
  Max Normal Load          : 15.0504
  Max Normal Stress        : -201553.
  Displacement             : 0.000095476
  Contact a-length         : 0.0168548
  Contact b-length         : 0.00204948
  Contact area             : 0.000108522
  Distance to Corner: Dp   : 0.00939516
  Distance to Corner: Ds   : 0.00939516
  Effective Speed Factor   : 2.659
  Load-Life Factor         : 14.1338
                                       8
  Expected Average Life    : 1.51643 10
****
 Contact name              : DsCi
  Max Normal Load          : 25.7296
  Max Normal Stress        : -243960.
  Displacement             : 0.000139864
  Contact a-length         : 0.0204001
  Contact b-length         : 0.00248038
  Contact area             : 0.000158964
  Distance to Corner       : 0.0135308
  Effective Speed Factor   : 2.659
  Load-Life Factor         : 8.26751
                                       7
  Expected Average Life    : 1.77534 10
```

```
=========================
 Ball number          : 11
 Ball angle           : 250.
 Ball position        : {-2.28569, -0.612449, 0.}
 Solution current?    : Yes
 Ball activity        : ON
 Ball request         : solve
 Cross over angle          : 35.1863
 Residual Force Vector     : {-0.278537, 0.467952, -0.0626505}
                                                  -6
 Displacement Residual     : 2.13286 10
****
 Contact name              : DpCo
  Max Normal Load          : 21.7388
  Max Normal Stress        : -231002.
  Displacement             : 0.000125421
  Contact a-length         : 0.019318
  Contact b-length         : 0.00234907
  Contact area             : 0.000142563
  Distance to Corner       : 0.0146128
  Effective Speed Factor   : 2.659
  Load-Life Factor         : 9.78525
                                       7
  Expected Average Life    : 3.48394 10
****
 Contact name              : DiCi
  Max Normal Load          : 15.042
  Max Normal Stress        : -201549.
  Displacement             : 0.0000954729
  Contact a-length         : 0.0168546
  Contact b-length         : 0.00204945
  Contact area             : 0.000108519
  Distance to Corner: Dp   : 0.00939543
  Distance to Corner: Ds   : 0.00939543
  Effective Speed Factor   : 2.659
  Load-Life Factor         : 14.1417
                                       8
  Expected Average Life    : 1.51983 10
****
 Contact name              : DsCi
  Max Normal Load          : 25.6759
  Max Normal Stress        : -243780.
  Displacement             : 0.000139658
  Contact a-length         : 0.020385
  Contact b-length         : 0.00247854
  Contact area             : 0.000158729
  Distance to Corner       : 0.0135458
  Effective Speed Factor   : 2.659
  Load-Life Factor         : 8.28483
                                       7
  Expected Average Life    : 1.79027 10
```

```
==========================
 Ball number          : 12
 Ball angle           : 240.
 Ball position        : {-2.1336, -0.994914, 0.}
 Solution current?    : Yes
 Ball activity        : ON
 Ball request         : solve
 Cross over angle          : 35.279
 Residual Force Vector     : {-0.351434, 0.403882, -0.0642052}
                                          -6
 Displacement Residual     : 2.10066 10
****
 Contact name              : DpCo
  Max Normal Load          : 21.6703
  Max Normal Stress        : -230757.
  Displacement             : 0.000125154
  Contact a-length         : 0.0192975
  Contact b-length         : 0.00234657
  Contact area             : 0.00014226
  Distance to Corner       : 0.0146334
  Effective Speed Factor   : 2.659
  Load-Life Factor         : 9.81621
                                        7
  Expected Average Life    : 3.52825 10
****
 Contact name              : DiCi
  Max Normal Load          : 15.0334
  Max Normal Stress        : -201545.
  Displacement             : 0.000095469
  Contact a-length         : 0.0168542
  Contact b-length         : 0.0020494
  Contact area             : 0.000108514
  Distance to Corner: Dp   : 0.00939577
  Distance to Corner: Ds   : 0.00939577
  Effective Speed Factor   : 2.659
  Load-Life Factor         : 14.1499
                                        8
  Expected Average Life    : 1.52332 10
****
 Contact name              : DsCi
  Max Normal Load          : 25.6218
  Max Normal Stress        : -243598.
  Displacement             : 0.00013945
  Contact a-length         : 0.0203698
  Contact b-length         : 0.0024767
  Contact area             : 0.000158493
  Distance to Corner       : 0.013561
  Effective Speed Factor   : 2.659
  Load-Life Factor         : 8.30231
                                        7
  Expected Average Life    : 1.80542 10
```

```
=========================
 Ball number          : 13
 Ball angle           : 230.
 Ball position        : {-1.91847, -1.34332, 0.}
 Solution current?    : Yes
 Ball activity        : ON
 Ball request         : solve
 Cross over angle          : 35.3721
 Residual Force Vector     : {-0.410649, 0.329009, -0.065727}
                                          -6
 Displacement Residual     : 2.06851 10
****
 Contact name              : DpCo
  Max Normal Load          : 21.6015
  Max Normal Stress        : -230510.
  Displacement             : 0.000124887
  Contact a-length         : 0.0192768
  Contact b-length         : 0.00234406
  Contact area             : 0.000141956
  Distance to Corner       : 0.014654
  Effective Speed Factor   : 2.659
  Load-Life Factor         : 9.84748
                                        7
  Expected Average Life    : 3.57341 10
****
 Contact name              : DiCi
  Max Normal Load          : 15.0246
  Max Normal Stress        : -201540.
  Displacement             : 0.0000954642
  Contact a-length         : 0.0168538
  Contact b-length         : 0.00204935
  Contact area             : 0.000108509
  Distance to Corner: Dp   : 0.0093962
  Distance to Corner: Ds   : 0.0093962
  Effective Speed Factor   : 2.659
  Load-Life Factor         : 14.1581
                                        8
  Expected Average Life    : 1.52689 10
****
 Contact name              : DsCi
  Max Normal Load          : 25.5675
  Max Normal Stress        : -243416.
  Displacement             : 0.000139241
  Contact a-length         : 0.0203546
  Contact b-length         : 0.00247485
  Contact area             : 0.000158256
  Distance to Corner       : 0.0135762
  Effective Speed Factor   : 2.659
  Load-Life Factor         : 8.31995
                                        7
  Expected Average Life    : 1.82081 10
```

```
=========================
 Ball number          : 14
 Ball angle           : 220.
 Ball position        : {-1.64746, -1.64746, 0.}
 Solution current?    : Yes
 Ball activity        : ON
 Ball request         : solve
 Cross over angle          : 35.4655
 Residual Force Vector     : {-0.454696, 0.246116, -0.0672152}
                                          -6
 Displacement Residual     : 2.0364 10
****
 Contact name              : DpCo
  Max Normal Load          : 21.5325
  Max Normal Stress        : -230261.
  Displacement             : 0.000124618
  Contact a-length         : 0.019256
  Contact b-length         : 0.00234153
  Contact area             : 0.00014165
  Distance to Corner       : 0.0146748
  Effective Speed Factor   : 2.659
  Load-Life Factor         : 9.87904
                                        7
  Expected Average Life    : 3.61945 10
****
 Contact name              : DiCi
  Max Normal Load          : 15.0156
  Max Normal Stress        : -201534.
  Displacement             : 0.0000954585
  Contact a-length         : 0.0168533
  Contact b-length         : 0.00204929
  Contact area             : 0.000108502
  Distance to Corner: Dp   : 0.0093967
  Distance to Corner: Ds   : 0.0093967
  Effective Speed Factor   : 2.659
  Load-Life Factor         : 14.1666
                                        8
  Expected Average Life    : 1.53056 10
****
 Contact name              : DsCi
  Max Normal Load          : 25.5129
  Max Normal Stress        : -243233.
  Displacement             : 0.000139032
  Contact a-length         : 0.0203393
  Contact b-length         : 0.00247298
  Contact area             : 0.000158018
  Distance to Corner       : 0.0135916
  Effective Speed Factor   : 2.659
  Load-Life Factor         : 8.33775
                                        7
  Expected Average Life    : 1.83645 10
```

```
=========================
 Ball number          : 15
 Ball angle           : 210.
 Ball position        : {-1.32938, -1.89856, 0.}
 Solution current?    : Yes
 Ball activity        : ON
 Ball request         : solve
 Cross over angle          : 35.5594
 Residual Force Vector     : {-0.482634, 0.158164, -0.068669}
                                        -6
 Displacement Residual     : 2.00435 10
****
 Contact name              : DpCo
  Max Normal Load          : 21.4632
  Max Normal Stress        : -230012.
  Displacement             : 0.000124347
  Contact a-length         : 0.0192351
  Contact b-length         : 0.00233899
  Contact area             : 0.000141343
  Distance to Corner       : 0.0146957
  Effective Speed Factor   : 2.659
  Load-Life Factor         : 9.9109
                                       7
  Expected Average Life    : 3.66637 10
****
 Contact name              : DiCi
  Max Normal Load          : 15.0064
  Max Normal Stress        : -201527.
  Displacement             : 0.0000954519
  Contact a-length         : 0.0168527
  Contact b-length         : 0.00204922
  Contact area             : 0.000108495
  Distance to Corner: Dp   : 0.00939728
  Distance to Corner: Ds   : 0.00939728
  Effective Speed Factor   : 2.659
  Load-Life Factor         : 14.1753
                                       8
  Expected Average Life    : 1.53431 10
****
 Contact name              : DsCi
  Max Normal Load          : 25.458
  Max Normal Stress        : -243048.
  Displacement             : 0.000138821
  Contact a-length         : 0.0203238
  Contact b-length         : 0.00247111
  Contact area             : 0.000157778
  Distance to Corner       : 0.013607
  Effective Speed Factor   : 2.659
  Load-Life Factor         : 8.35572
                                       7
  Expected Average Life    : 1.85233 10
```

```
=========================
 Ball number          : 16
 Ball angle           : 200.
 Ball position        : {-0.97437, -2.08954, 0.}
 Solution current?    : Yes
 Ball activity        : ON
 Ball request         : solve
 Cross over angle          : 35.6536
 Residual Force Vector     : {-0.494085, 0.0681891, -0.0700877}
                                          -6
 Displacement Residual     : 1.97236 10
****
 Contact name              : DpCo
  Max Normal Load          : 21.3938
  Max Normal Stress        : -229760.
  Displacement             : 0.000124076
  Contact a-length         : 0.0192141
  Contact b-length         : 0.00233644
  Contact area             : 0.000141034
  Distance to Corner       : 0.0147167
  Effective Speed Factor   : 2.659
  Load-Life Factor         : 9.94307
                                        7
  Expected Average Life    : 3.7142 10
****
 Contact name              : DiCi
  Max Normal Load          : 14.997
  Max Normal Stress        : -201519.
  Displacement             : 0.0000954444
  Contact a-length         : 0.0168521
  Contact b-length         : 0.00204914
  Contact area             : 0.000108486
  Distance to Corner: Dp   : 0.00939795
  Distance to Corner: Ds   : 0.00939795
  Effective Speed Factor   : 2.659
  Load-Life Factor         : 14.1842
                                          8
  Expected Average Life    : 1.53815 10
****
 Contact name              : DsCi
  Max Normal Load          : 25.4029
  Max Normal Stress        : -242863.
  Displacement             : 0.000138609
  Contact a-length         : 0.0203083
  Contact b-length         : 0.00246922
  Contact area             : 0.000157538
  Distance to Corner       : 0.0136225
  Effective Speed Factor   : 2.659
  Load-Life Factor         : 8.37385
                                        7
  Expected Average Life    : 1.86846 10
```

```
==========================
 Ball number          : 17
 Ball angle           : 190.
 Ball position        : {-0.593576, -2.21526, 0.}
 Solution current?    : Yes
 Ball activity        : ON
 Ball request         : solve
 Cross over angle          : 35.7481
 Residual Force Vector     : {-0.489227, -0.0208005, -0.0714705}
                                                  -6
 Displacement Residual     : 1.94042 10
****
 Contact name              : DpCo
  Max Normal Load          : 21.3241
  Max Normal Stress        : -229508.
  Displacement             : 0.000123803
  Contact a-length         : 0.019193
  Contact b-length         : 0.00233387
  Contact area             : 0.000140724
  Distance to Corner       : 0.0147378
  Effective Speed Factor   : 2.659
  Load-Life Factor         : 9.97555
                                        7
  Expected Average Life    : 3.76297 10
****
 Contact name              : DiCi
  Max Normal Load          : 14.9874
  Max Normal Stress        : -201510.
  Displacement             : 0.000095436
  Contact a-length         : 0.0168513
  Contact b-length         : 0.00204905
  Contact area             : 0.000108477
  Distance to Corner: Dp   : 0.00939869
  Distance to Corner: Ds   : 0.00939869
  Effective Speed Factor   : 2.659
  Load-Life Factor         : 14.1932
                                        8
  Expected Average Life    : 1.54209 10
****
 Contact name              : DsCi
  Max Normal Load          : 25.3475
  Max Normal Stress        : -242676.
  Displacement             : 0.000138396
  Contact a-length         : 0.0202927
  Contact b-length         : 0.00246733
  Contact area             : 0.000157296
  Distance to Corner       : 0.0136381
  Effective Speed Factor   : 2.659
  Load-Life Factor         : 8.39215
                                        7
  Expected Average Life    : 1.88485 10
```

```
==========================
 Ball number          : 18
 Ball angle           : 180.
 Ball position        : {-0.198824, -2.27257, 0.}
 Solution current?    : Yes
 Ball activity        : ON
 Ball request         : solve
 Cross over angle          : 29.2646
 Residual Force Vector     : {-0.1222, 0.00226843, 0.0108779}
                                                  -7
 Displacement Residual     : 4.88825 10
****
 Contact name              : DpCi
  Max Normal Load          : 23.039
  Max Normal Stress        : -234845.
  Displacement             : 0.000129617
  Contact a-length         : 0.0196385
  Contact b-length         : 0.00238788
  Contact area             : 0.000147323
  Distance to Corner       : 0.0142923
  Effective Speed Factor   : 2.659
  Load-Life Factor         : 9.23303
                                       7
  Expected Average Life    : 2.7616 10
****
 Contact name              : DiCi
  Max Normal Load          : 12.9939
  Max Normal Stress        : -193438.
  Displacement             : 0.0000879425
  Contact a-length         : 0.0161762
  Contact b-length         : 0.00196696
  Contact area             : 0.0000999592
  Distance to Corner: Dp   : 0.0100738
  Distance to Corner: Ds   : 0.0100738
  Effective Speed Factor   : 2.659
  Load-Life Factor         : 16.3708
                                       8
  Expected Average Life    : 2.72936 10
****
 Contact name              : DsCo
  Max Normal Load          : 27.2505
  Max Normal Stress        : -248366.
  Displacement             : 0.000144993
  Contact a-length         : 0.0207707
  Contact b-length         : 0.00252582
  Contact area             : 0.000164817
  Distance to Corner       : 0.0131602
  Effective Speed Factor   : 2.659
  Load-Life Factor         : 7.8061
                                       7
  Expected Average Life    : 1.41098 10
```

```
=========================
 Ball number          : 19
 Ball angle           : 170.
 Ball position        : {0.199883, -2.28468, 0.}
 Solution current?    : Yes
 Ball activity        : ON
 Ball request         : solve
 Cross over angle          : 29.1677
 Residual Force Vector     : {-0.120737, -0.0188149, 0.0105992}
                                                  -7
 Displacement Residual     : 4.897 10
****
 Contact name              : DpCi
  Max Normal Load          : 23.1156
  Max Normal Stress        : -235106.
  Displacement             : 0.000129904
  Contact a-length         : 0.0196603
  Contact b-length         : 0.00239053
  Contact area             : 0.00014765
  Distance to Corner       : 0.0142706
  Effective Speed Factor   : 2.659
  Load-Life Factor         : 9.20244
                                        7
  Expected Average Life    : 2.72519 10
****
 Contact name              : DiCi
  Max Normal Load          : 12.987
  Max Normal Stress        : -193402.
  Displacement             : 0.0000879105
  Contact a-length         : 0.0161733
  Contact b-length         : 0.0019666
  Contact area             : 0.0000999228
  Distance to Corner: Dp   : 0.0100767
  Distance to Corner: Ds   : 0.0100767
  Effective Speed Factor   : 2.659
  Load-Life Factor         : 16.3795
                                        8
  Expected Average Life    : 2.73516 10
****
 Contact name              : DsCo
  Max Normal Load          : 27.314
  Max Normal Stress        : -248558.
  Displacement             : 0.000145217
  Contact a-length         : 0.0207867
  Contact b-length         : 0.00252777
  Contact area             : 0.000165072
  Distance to Corner       : 0.0131441
  Effective Speed Factor   : 2.659
  Load-Life Factor         : 7.78794
                                        7
  Expected Average Life    : 1.39789 10
```

```
=========================
 Ball number          : 20
 Ball angle           : 160.
 Ball position        : {0.596722, -2.227, 0.}
 Solution current?    : Yes
 Ball activity        : ON
 Ball request         : solve
 Cross over angle         : 29.0713
 Residual Force Vector    : {-0.115667, -0.039332, 0.0103272}
                                        -7
 Displacement Residual    : 4.9057 10
****
 Contact name             : DpCi
  Max Normal Load         : 23.1919
  Max Normal Stress       : -235364.
  Displacement            : 0.00013019
  Contact a-length        : 0.0196819
  Contact b-length        : 0.00239316
  Contact area            : 0.000147975
  Distance to Corner      : 0.0142489
  Effective Speed Factor  : 2.659
  Load-Life Factor        : 9.17217
                                     7
  Expected Average Life   : 2.6895 10
****
 Contact name             : DiCi
  Max Normal Load         : 12.9799
  Max Normal Stress       : -193366.
  Displacement            : 0.0000878775
  Contact a-length        : 0.0161702
  Contact b-length        : 0.00196623
  Contact area            : 0.0000998853
  Distance to Corner: Dp  : 0.0100798
  Distance to Corner: Ds  : 0.0100798
  Effective Speed Factor  : 2.659
  Load-Life Factor        : 16.3884
                                       8
  Expected Average Life   : 2.74115 10
****
 Contact name             : DsCo
  Max Normal Load         : 27.3773
  Max Normal Stress       : -248748.
  Displacement            : 0.00014544
  Contact a-length        : 0.0208027
  Contact b-length        : 0.00252971
  Contact area            : 0.000165325
  Distance to Corner      : 0.0131282
  Effective Speed Factor  : 2.659
  Load-Life Factor        : 7.76995
                                       7
  Expected Average Life   : 1.38502 10
```

```
==========================
 Ball number          : 21
 Ball angle           : 150.
 Ball position        : {0.979506, -2.10056, 0.}
 Solution current?    : Yes
 Ball activity        : ON
 Ball request         : solve
 Cross over angle         : 28.9752
 Residual Force Vector    : {-0.107138, -0.05867, 0.0100617}
                                        -7
 Displacement Residual    : 4.91437 10
****
 Contact name             : DpCi
  Max Normal Load         : 23.2679
  Max Normal Stress       : -235622.
  Displacement            : 0.000130475
  Contact a-length        : 0.0197034
  Contact b-length        : 0.00239578
  Contact area            : 0.000148299
  Distance to Corner      : 0.0142274
  Effective Speed Factor  : 2.659
  Load-Life Factor        : 9.1422
                                      7
  Expected Average Life   : 2.65452 10
****
 Contact name             : DiCi
  Max Normal Load         : 12.9726
  Max Normal Stress       : -193329.
  Displacement            : 0.0000878436
  Contact a-length        : 0.0161671
  Contact b-length        : 0.00196586
  Contact area            : 0.0000998468
  Distance to Corner: Dp  : 0.0100829
  Distance to Corner: Ds  : 0.0100829
  Effective Speed Factor  : 2.659
  Load-Life Factor        : 16.3977
                                      8
  Expected Average Life   : 2.74734 10
****
 Contact name             : DsCo
  Max Normal Load         : 27.4402
  Max Normal Stress       : -248938.
  Displacement            : 0.000145662
  Contact a-length        : 0.0208185
  Contact b-length        : 0.00253164
  Contact area            : 0.000165577
  Distance to Corner      : 0.0131123
  Effective Speed Factor  : 2.659
  Load-Life Factor        : 7.75213
                                      7
  Expected Average Life   : 1.37236 10
```

```
=========================
 Ball number          : 22
 Ball angle           : 140.
 Ball position        : {1.33635, -1.90851, 0.}
 Solution current?    : Yes
 Ball activity        : ON
 Ball request         : solve
 Cross over angle          : 28.8795
 Residual Force Vector     : {-0.095406, -0.0762509, 0.00980237}
                                                  -7
 Displacement Residual     : 4.92299 10
****
 Contact name              : DpCi
  Max Normal Load          : 23.3437
  Max Normal Stress        : -235877.
  Displacement             : 0.000130758
  Contact a-length         : 0.0197248
  Contact b-length         : 0.00239837
  Contact area             : 0.000148621
  Distance to Corner       : 0.014206
  Effective Speed Factor   : 2.659
  Load-Life Factor         : 9.11253
                                        7
  Expected Average Life    : 2.62023 10
****
 Contact name              : DiCi
  Max Normal Load          : 12.9651
  Max Normal Stress        : -193290.
  Displacement             : 0.0000878087
  Contact a-length         : 0.0161639
  Contact b-length         : 0.00196547
  Contact area             : 0.0000998072
  Distance to Corner: Dp   : 0.0100861
  Distance to Corner: Ds   : 0.0100861
  Effective Speed Factor   : 2.659
  Load-Life Factor         : 16.4072
                                        8
  Expected Average Life    : 2.75372 10
****
 Contact name              : DsCo
  Max Normal Load          : 27.5028
  Max Normal Stress        : -249126.
  Displacement             : 0.000145882
  Contact a-length         : 0.0208343
  Contact b-length         : 0.00253355
  Contact area             : 0.000165828
  Distance to Corner       : 0.0130966
  Effective Speed Factor   : 2.659
  Load-Life Factor         : 7.73447
                                        7
  Expected Average Life    : 1.3599 10
```

```
=========================
 Ball number          : 23
 Ball angle           : 130.
 Ball position        : {1.65605, -1.65605, 0.}
 Solution current?    : Yes
 Ball activity        : ON
 Ball request         : solve
 Cross over angle          : 28.7842
 Residual Force Vector     : {-0.0808188, -0.0915483, 0.00954913}
                                                  -7
 Displacement Residual     : 4.93156 10
****
 Contact name              : DpCi
  Max Normal Load          : 23.4192
  Max Normal Stress        : -236132.
  Displacement             : 0.00013104
  Contact a-length         : 0.019746
  Contact b-length         : 0.00240096
  Contact area             : 0.000148941
  Distance to Corner       : 0.0141848
  Effective Speed Factor   : 2.659
  Load-Life Factor         : 9.08316
                                       7
  Expected Average Life    : 2.58662 10
****
 Contact name              : DiCi
  Max Normal Load          : 12.9573
  Max Normal Stress        : -193251.
  Displacement             : 0.0000877729
  Contact a-length         : 0.0161606
  Contact b-length         : 0.00196506
  Contact area             : 0.0000997665
  Distance to Corner: Dp   : 0.0100894
  Distance to Corner: Ds   : 0.0100894
  Effective Speed Factor   : 2.659
  Load-Life Factor         : 16.417
                                       8
  Expected Average Life    : 2.76029 10
****
 Contact name              : DsCo
  Max Normal Load          : 27.5652
  Max Normal Stress        : -249314.
  Displacement             : 0.000146102
  Contact a-length         : 0.0208499
  Contact b-length         : 0.00253546
  Contact area             : 0.000166078
  Distance to Corner       : 0.0130809
  Effective Speed Factor   : 2.659
  Load-Life Factor         : 7.71698
                                       7
  Expected Average Life    : 1.34764 10
```

```
=========================
 Ball number          : 24
 Ball angle           : 120.
 Ball position        : {1.92842, -1.35029, 0.}
 Solution current?    : Yes
 Ball activity        : ON
 Ball request         : solve
 Cross over angle          : 28.6893
 Residual Force Vector     : {-0.0638121, -0.104104, 0.00930176}
                                                  -7
 Displacement Residual     : 4.94007 10
****
 Contact name              : DpCi
  Max Normal Load          : 23.4943
  Max Normal Stress        : -236384.
  Displacement             : 0.000131321
  Contact a-length         : 0.0197672
  Contact b-length         : 0.00240353
  Contact area             : 0.00014926
  Distance to Corner       : 0.0141636
  Effective Speed Factor   : 2.659
  Load-Life Factor         : 9.05409
                                       7
  Expected Average Life    : 2.55366 10
****
 Contact name              : DiCi
  Max Normal Load          : 12.9494
  Max Normal Stress        : -193211.
  Displacement             : 0.0000877362
  Contact a-length         : 0.0161572
  Contact b-length         : 0.00196465
  Contact area             : 0.0000997247
  Distance to Corner: Dp   : 0.0100928
  Distance to Corner: Ds   : 0.0100928
  Effective Speed Factor   : 2.659
  Load-Life Factor         : 16.427
                                       8
  Expected Average Life    : 2.76706 10
****
 Contact name              : DsCo
  Max Normal Load          : 27.6272
  Max Normal Stress        : -249500.
  Displacement             : 0.00014632
  Contact a-length         : 0.0208655
  Contact b-length         : 0.00253735
  Contact area             : 0.000166326
  Distance to Corner       : 0.0130653
  Effective Speed Factor   : 2.659
  Load-Life Factor         : 7.69965
                                       7
  Expected Average Life    : 1.33557 10
```

```
==========================
 Ball number          : 25
 Ball angle           : 110.
 Ball position        : {2.14461, -1.00005, 0.}
 Solution current?    : Yes
 Ball activity        : ON
 Ball request         : solve
 Cross over angle          : 28.5948
 Residual Force Vector     : {-0.0448939, -0.11354, 0.00906007}
                                                  -7
 Displacement Residual     : 4.94853 10
****
 Contact name              : DpCi
  Max Normal Load          : 23.5693
  Max Normal Stress        : -236635.
  Displacement             : 0.0001316
  Contact a-length         : 0.0197882
  Contact b-length         : 0.00240608
  Contact area             : 0.000149577
  Distance to Corner       : 0.0141426
  Effective Speed Factor   : 2.659
  Load-Life Factor         : 9.02532
                                        7
  Expected Average Life    : 2.52135 10
****
 Contact name              : DiCi
  Max Normal Load          : 12.9413
  Max Normal Stress        : -193169.
  Displacement             : 0.0000876986
  Contact a-length         : 0.0161538
  Contact b-length         : 0.00196423
  Contact area             : 0.0000996819
  Distance to Corner: Dp   : 0.0100962
  Distance to Corner: Ds   : 0.0100962
  Effective Speed Factor   : 2.659
  Load-Life Factor         : 16.4373
                                        8
  Expected Average Life    : 2.77401 10
****
 Contact name              : DsCo
  Max Normal Load          : 27.689
  Max Normal Stress        : -249685.
  Displacement             : 0.000146537
  Contact a-length         : 0.020881
  Contact b-length         : 0.00253923
  Contact area             : 0.000166572
  Distance to Corner       : 0.0130499
  Effective Speed Factor   : 2.659
  Load-Life Factor         : 7.68247
                                        7
  Expected Average Life    : 1.32369 10
```

```
=========================
 Ball number          : 26
 Ball angle           : 100.
 Ball position        : {2.29743, -0.615594, 0.}
 Solution current?    : Yes
 Ball activity        : ON
 Ball request         : solve
 Cross over angle          : 28.5007
 Residual Force Vector     : {-0.0246299, -0.119574, 0.00882388}
                                                  -7
 Displacement Residual     : 4.95692 10
****
 Contact name              : DpCi
  Max Normal Load          : 23.6439
  Max Normal Stress        : -236885.
  Displacement             : 0.000131878
  Contact a-length         : 0.0198091
  Contact b-length         : 0.00240862
  Contact area             : 0.000149893
  Distance to Corner       : 0.0141218
  Effective Speed Factor   : 2.659
  Load-Life Factor         : 8.99683
                                        7
  Expected Average Life    : 2.48967 10
****
 Contact name              : DiCi
  Max Normal Load          : 12.933
  Max Normal Stress        : -193127.
  Displacement             : 0.00008766
  Contact a-length         : 0.0161502
  Contact b-length         : 0.0019638
  Contact area             : 0.0000996381
  Distance to Corner: Dp   : 0.0100998
  Distance to Corner: Ds   : 0.0100998
  Effective Speed Factor   : 2.659
  Load-Life Factor         : 16.4479
                                        8
  Expected Average Life    : 2.78116 10
****
 Contact name              : DsCo
  Max Normal Load          : 27.7505
  Max Normal Stress        : -249869.
  Displacement             : 0.000146753
  Contact a-length         : 0.0208963
  Contact b-length         : 0.0025411
  Contact area             : 0.000166818
  Distance to Corner       : 0.0130345
  Effective Speed Factor   : 2.659
  Load-Life Factor         : 7.66546
                                        7
  Expected Average Life    : 1.31201 10
```

```
=========================
 Ball number          : 27
 Ball angle           : 90.
 Ball position        : {2.38153, -0.208357, 0.}
 Solution current?    : Yes
 Ball activity        : ON
 Ball request         : solve
 Cross over angle          : 28.4069
 Residual Force Vector     : {-0.00362664, -0.122022, 0.00859303}
                                          -7
 Displacement Residual     : 4.96524 10
****
 Contact name              : DpCi
  Max Normal Load          : 23.7182
  Max Normal Stress        : -237133.
  Displacement             : 0.000132154
  Contact a-length         : 0.0198298
  Contact b-length         : 0.00241114
  Contact area             : 0.000150207
  Distance to Corner       : 0.014101
  Effective Speed Factor   : 2.659
  Load-Life Factor         : 8.96863
                                       7
  Expected Average Life    : 2.4586 10
****
 Contact name              : DiCi
  Max Normal Load          : 12.9244
  Max Normal Stress        : -193083.
  Displacement             : 0.0000876206
  Contact a-length         : 0.0161466
  Contact b-length         : 0.00196336
  Contact area             : 0.0000995933
  Distance to Corner: Dp   : 0.0101034
  Distance to Corner: Ds   : 0.0101034
  Effective Speed Factor   : 2.659
  Load-Life Factor         : 16.4587
                                       8
  Expected Average Life    : 2.7885 10
****
 Contact name              : DsCo
  Max Normal Load          : 27.8116
  Max Normal Stress        : -250051.
  Displacement             : 0.000146968
  Contact a-length         : 0.0209116
  Contact b-length         : 0.00254296
  Contact area             : 0.000167062
  Distance to Corner       : 0.0130192
  Effective Speed Factor   : 2.659
  Load-Life Factor         : 7.6486
                                       7
  Expected Average Life    : 1.3005 10
```

```
=========================
 Ball number          : 28
 Ball angle           : 80.
 Ball position        : {2.39363, 0.209416, 0.}
 Solution current?    : Yes
 Ball activity        : ON
 Ball request         : solve
 Cross over angle          : 28.3136
 Residual Force Vector     : {0.0174865, -0.12081, 0.00836737}
                                                  -7
 Displacement Residual     : 4.97349 10
****
 Contact name              : DpCi
  Max Normal Load          : 23.7923
  Max Normal Stress        : -237380.
  Displacement             : 0.00013243
  Contact a-length         : 0.0198505
  Contact b-length         : 0.00241365
  Contact area             : 0.00015052
  Distance to Corner       : 0.0140804
  Effective Speed Factor   : 2.659
  Load-Life Factor         : 8.94071
                                        7
  Expected Average Life    : 2.42813 10
****
 Contact name              : DiCi
  Max Normal Load          : 12.9157
  Max Normal Stress        : -193039.
  Displacement             : 0.0000875803
  Contact a-length         : 0.0161429
  Contact b-length         : 0.00196291
  Contact area             : 0.0000995475
  Distance to Corner: Dp   : 0.0101071
  Distance to Corner: Ds   : 0.0101071
  Effective Speed Factor   : 2.659
  Load-Life Factor         : 16.4698
                                        8
  Expected Average Life    : 2.79603 10
****
 Contact name              : DsCo
  Max Normal Load          : 27.8725
  Max Normal Stress        : -250233.
  Displacement             : 0.000147181
  Contact a-length         : 0.0209268
  Contact b-length         : 0.00254481
  Contact area             : 0.000167304
  Distance to Corner       : 0.013004
  Effective Speed Factor   : 2.659
  Load-Life Factor         : 7.63189
                                        7
  Expected Average Life    : 1.28918 10
```

```
==========================

 Ball number          : 29
 Ball angle           : 70.
 Ball position        : {2.33264, 0.62503, 0.}
 Solution current?    : Yes
 Ball activity        : ON
 Ball request         : solve
 Cross over angle          : 28.2206
 Residual Force Vector     : {0.0380764, -0.115973, 0.00814673}
                                          -7
 Displacement Residual     : 4.98167 10
****
 Contact name              : DpCi
  Max Normal Load          : 23.8661
  Max Normal Stress        : -237625.
  Displacement             : 0.000132703
  Contact a-length         : 0.019871
  Contact b-length         : 0.00241614
  Contact area             : 0.000150831
  Distance to Corner       : 0.0140599
  Effective Speed Factor   : 2.659
  Load-Life Factor         : 8.91308
                                        7
  Expected Average Life    : 2.39825 10
****
 Contact name              : DiCi
  Max Normal Load          : 12.9068
  Max Normal Stress        : -192993.
  Displacement             : 0.0000875391
  Contact a-length         : 0.0161391
  Contact b-length         : 0.00196244
  Contact area             : 0.0000995007
  Distance to Corner: Dp   : 0.0101109
  Distance to Corner: Ds   : 0.0101109
  Effective Speed Factor   : 2.659
  Load-Life Factor         : 16.4812
                                        8
  Expected Average Life    : 2.80375 10
****
 Contact name              : DsCo
  Max Normal Load          : 27.9331
  Max Normal Stress        : -250413.
  Displacement             : 0.000147393
  Contact a-length         : 0.0209419
  Contact b-length         : 0.00254664
  Contact area             : 0.000167546
  Distance to Corner       : 0.0129889
  Effective Speed Factor   : 2.659
  Load-Life Factor         : 7.61534
                                        7
  Expected Average Life    : 1.27803 10
```

```
=========================
 Ball number          : 30
 Ball angle           : 60.
 Ball position        : {2.19968, 1.02573, 0.}
 Solution current?    : Yes
 Ball activity        : ON
 Ball request         : solve
 Cross over angle          : 28.128
 Residual Force Vector     : {0.0575248, -0.107654, 0.00793098}
                                                  -7
 Displacement Residual     : 4.98977 10
****
 Contact name              : DpCi
  Max Normal Load          : 23.9395
  Max Normal Stress        : -237869.
  Displacement             : 0.000132976
  Contact a-length         : 0.0198913
  Contact b-length         : 0.00241862
  Contact area             : 0.000151141
  Distance to Corner       : 0.0140395
  Effective Speed Factor   : 2.659
  Load-Life Factor         : 8.88572
                                       7
  Expected Average Life    : 2.36894 10
****
 Contact name              : DiCi
  Max Normal Load          : 12.8977
  Max Normal Stress        : -192947.
  Displacement             : 0.000087497
  Contact a-length         : 0.0161352
  Contact b-length         : 0.00196197
  Contact area             : 0.0000994529
  Distance to Corner: Dp   : 0.0101148
  Distance to Corner: Ds   : 0.0101148
  Effective Speed Factor   : 2.659
  Load-Life Factor         : 16.4928
                                       8
  Expected Average Life    : 2.81166 10
****
 Contact name              : DsCo
  Max Normal Load          : 27.9934
  Max Normal Stress        : -250592.
  Displacement             : 0.000147604
  Contact a-length         : 0.0209569
  Contact b-length         : 0.00254846
  Contact area             : 0.000167786
  Distance to Corner       : 0.0129739
  Effective Speed Factor   : 2.659
  Load-Life Factor         : 7.59894
                                       7
  Expected Average Life    : 1.26706 10
```

```
=========================
 Ball number          : 31
 Ball angle           : 50.
 Ball position        : {1.99811, 1.39909, 0.}
 Solution current?    : Yes
 Ball activity        : ON
 Ball request         : solve
 Cross over angle         : 28.0358
 Residual Force Vector    : {0.0752474, -0.096101, 0.00771997}
                                          -7
 Displacement Residual    : 4.99778 10
****
 Contact name             : DpCi
  Max Normal Load         : 24.0128
  Max Normal Stress       : -238112.
  Displacement            : 0.000133247
  Contact a-length        : 0.0199116
  Contact b-length        : 0.00242109
  Contact area            : 0.000151449
  Distance to Corner      : 0.0140192
  Effective Speed Factor  : 2.659
  Load-Life Factor        : 8.85863
                                       7
  Expected Average Life   : 2.34018 10
****
 Contact name             : DiCi
  Max Normal Load         : 12.8885
  Max Normal Stress       : -192900.
  Displacement            : 0.0000874541
  Contact a-length        : 0.0161312
  Contact b-length        : 0.00196149
  Contact area            : 0.0000994041
  Distance to Corner: Dp  : 0.0101188
  Distance to Corner: Ds  : 0.0101188
  Effective Speed Factor  : 2.659
  Load-Life Factor        : 16.5047
                                       8
  Expected Average Life   : 2.81976 10
****
 Contact name             : DsCo
  Max Normal Load         : 28.0534
  Max Normal Stress       : -250771.
  Displacement            : 0.000147814
  Contact a-length        : 0.0209718
  Contact b-length        : 0.00255028
  Contact area            : 0.000168024
  Distance to Corner      : 0.0129591
  Effective Speed Factor  : 2.659
  Load-Life Factor        : 7.58269
                                       7
  Expected Average Life   : 1.25625 10
```

```
=========================
 Ball number          : 32
 Ball angle           : 40.
 Ball position        : {1.73339, 1.73339, 0.}
 Solution current?    : Yes
 Ball activity        : ON
 Ball request         : solve
 Cross over angle          : 27.944
 Residual Force Vector     : {0.0907111, -0.0816596, 0.00751358}
                                          -7
 Displacement Residual     : 5.00572 10
****
 Contact name              : DpCi
  Max Normal Load          : 24.0857
  Max Normal Stress        : -238353.
  Displacement             : 0.000133517
  Contact a-length         : 0.0199318
  Contact b-length         : 0.00242354
  Contact area             : 0.000151756
  Distance to Corner       : 0.0139991
  Effective Speed Factor   : 2.659
  Load-Life Factor         : 8.83181
                                        7
  Expected Average Life    : 2.31197 10
****
 Contact name              : DiCi
  Max Normal Load          : 12.879
  Max Normal Stress        : -192852.
  Displacement             : 0.0000874104
  Contact a-length         : 0.0161272
  Contact b-length         : 0.001961
  Contact area             : 0.0000993544
  Distance to Corner: Dp   : 0.0101228
  Distance to Corner: Ds   : 0.0101228
  Effective Speed Factor   : 2.659
  Load-Life Factor         : 16.5168
                                        8
  Expected Average Life    : 2.82805 10
****
 Contact name              : DsCo
  Max Normal Load          : 28.1131
  Max Normal Stress        : -250948.
  Displacement             : 0.000148023
  Contact a-length         : 0.0209866
  Contact b-length         : 0.00255208
  Contact area             : 0.000168262
  Distance to Corner       : 0.0129442
  Effective Speed Factor   : 2.659
  Load-Life Factor         : 7.56658
                                        7
  Expected Average Life    : 1.24561 10
```

```
==========================
 Ball number          : 33
 Ball angle           : 30.
 Ball position        : {1.41303, 2.01802, 0.}
 Solution current?    : Yes
 Ball activity        : ON
 Ball request         : solve
 Cross over angle          : 27.8526
 Residual Force Vector     : {0.10345, -0.0647626, 0.00731166}
                                                  -7
 Displacement Residual     : 5.01356 10
****
 Contact name              : DpCi
  Max Normal Load          : 24.1583
  Max Normal Stress        : -238592.
  Displacement             : 0.000133785
  Contact a-length         : 0.0199518
  Contact b-length         : 0.00242597
  Contact area             : 0.000152061
  Distance to Corner       : 0.013979
  Effective Speed Factor   : 2.659
  Load-Life Factor         : 8.80526
                                       7
  Expected Average Life    : 2.28429 10
****
 Contact name              : DiCi
  Max Normal Load          : 12.8694
  Max Normal Stress        : -192802.
  Displacement             : 0.0000873658
  Contact a-length         : 0.0161231
  Contact b-length         : 0.0019605
  Contact area             : 0.0000993037
  Distance to Corner: Dp   : 0.0101269
  Distance to Corner: Ds   : 0.0101269
  Effective Speed Factor   : 2.659
  Load-Life Factor         : 16.5292
                                       8
  Expected Average Life    : 2.83653 10
****
 Contact name              : DsCo
  Max Normal Load          : 28.1725
  Max Normal Stress        : -251124.
  Displacement             : 0.000148231
  Contact a-length         : 0.0210013
  Contact b-length         : 0.00255387
  Contact area             : 0.000168498
  Distance to Corner       : 0.0129295
  Effective Speed Factor   : 2.659
  Load-Life Factor         : 7.55062
                                       7
  Expected Average Life    : 1.23514 10
```

```
=========================
 Ball number          : 34
 Ball angle           : 20.
 Ball position        : {1.04627, 2.24374, 0.}
 Solution current?    : Yes
 Ball activity        : ON
 Ball request         : solve
 Cross over angle          : 27.7615
 Residual Force Vector     : {0.11308, -0.0459167, 0.00711411}
                                                  -7
 Displacement Residual     : 5.02131 10
****
 Contact name              : DpCi
  Max Normal Load          : 24.2306
  Max Normal Stress        : -238830.
  Displacement             : 0.000134052
  Contact a-length         : 0.0199717
  Contact b-length         : 0.00242839
  Contact area             : 0.000152364
  Distance to Corner       : 0.0139591
  Effective Speed Factor   : 2.659
  Load-Life Factor         : 8.77897
                                      7
  Expected Average Life    : 2.25713 10
****
 Contact name              : DiCi
  Max Normal Load          : 12.8596
  Max Normal Stress        : -192752.
  Displacement             : 0.0000873205
  Contact a-length         : 0.0161189
  Contact b-length         : 0.00195999
  Contact area             : 0.0000992522
  Distance to Corner: Dp   : 0.0101311
  Distance to Corner: Ds   : 0.0101311
  Effective Speed Factor   : 2.659
  Load-Life Factor         : 16.5418
                                      8
  Expected Average Life    : 2.8452 10
****
 Contact name              : DsCo
  Max Normal Load          : 28.2316
  Max Normal Stress        : -251298.
  Displacement             : 0.000148437
  Contact a-length         : 0.0210159
  Contact b-length         : 0.00255564
  Contact area             : 0.000168733
  Distance to Corner       : 0.0129149
  Effective Speed Factor   : 2.659
  Load-Life Factor         : 7.53481
                                      7
  Expected Average Life    : 1.22482 10
```

```
=========================

 Ball number          : 35
 Ball angle           : 10.
 Ball position        : {0.643902, 2.40308, 0.}
 Solution current?    : Yes
 Ball activity        : ON
 Ball request         : solve
 Cross over angle          : 27.6709
 Residual Force Vector     : {0.119311, -0.0256881, 0.0069208}
                                                  -7
 Displacement Residual     : 5.02897 10
****
 Contact name              : DpCi
  Max Normal Load          : 24.3027
  Max Normal Stress        : -239067.
  Displacement             : 0.000134318
  Contact a-length         : 0.0199915
  Contact b-length         : 0.0024308
  Contact area             : 0.000152666
  Distance to Corner       : 0.0139394
  Effective Speed Factor   : 2.659
  Load-Life Factor         : 8.75294
                                       7
  Expected Average Life    : 2.23048 10
****
 Contact name              : DiCi
  Max Normal Load          : 12.8496
  Max Normal Stress        : -192701.
  Displacement             : 0.0000872743
  Contact a-length         : 0.0161146
  Contact b-length         : 0.00195947
  Contact area             : 0.0000991997
  Distance to Corner: Dp   : 0.0101354
  Distance to Corner: Ds   : 0.0101354
  Effective Speed Factor   : 2.659
  Load-Life Factor         : 16.5547
                                       8
  Expected Average Life    : 2.85406 10
****
 Contact name              : DsCo
  Max Normal Load          : 28.2905
  Max Normal Stress        : -251472.
  Displacement             : 0.000148643
  Contact a-length         : 0.0210305
  Contact b-length         : 0.00255741
  Contact area             : 0.000168966
  Distance to Corner       : 0.0129004
  Effective Speed Factor   : 2.659
  Load-Life Factor         : 7.51914
                                       7
  Expected Average Life    : 1.21466 10
```

```
=========================
 Ball number          : 36
 Ball angle           : 0.
 Ball position        : {0.217889, 2.49049, 0.}
 Solution current?    : Yes
 Ball activity        : ON
 Ball request         : solve
 Cross over angle          : 34.1912
 Residual Force Vector     : {0.640099, 0.0914643, -0.0435784}
                                                  -6
 Displacement Residual     : 2.48938 10
****
 Contact name              : DpCo
  Max Normal Load          : 22.4786
  Max Normal Stress        : -233613.
  Displacement             : 0.000128272
  Contact a-length         : 0.0195364
  Contact b-length         : 0.00237563
  Contact area             : 0.000145805
  Distance to Corner       : 0.0143945
  Effective Speed Factor   : 2.659
  Load-Life Factor         : 9.46323
                                       7
  Expected Average Life    : 3.04748 10
****
 Contact name              : DiCi
  Max Normal Load          : 15.1244
  Max Normal Stress        : -201536.
  Displacement             : 0.0000954598
  Contact a-length         : 0.0168534
  Contact b-length         : 0.00204931
  Contact area             : 0.000108504
  Distance to Corner: Dp   : 0.00939659
  Distance to Corner: Ds   : 0.00939659
  Effective Speed Factor   : 2.659
  Load-Life Factor         : 14.0647
                                       8
  Expected Average Life    : 1.48697 10
****
 Contact name              : DsCi
  Max Normal Load          : 26.2531
  Max Normal Stress        : -245705.
  Displacement             : 0.000141872
  Contact a-length         : 0.020546
  Contact b-length         : 0.00249812
  Contact area             : 0.000161246
  Distance to Corner       : 0.0133848
  Effective Speed Factor   : 2.659
  Load-Life Factor         : 8.10265
                                       7
  Expected Average Life    : 1.63792 10
```

```
=========================
Summary of Performance
=========================

 Applied Angular Twist (degrees) : 0.441531

 Total Internal Loads (Fx,Fy,Fz)
 Primary Disk                    : {-338.471, 61.9504, -617.788}
 Intermediate Disk               : {14.0308, -25.8057, -22.2235}
 Secondary Disk                  : {324.565, -41.1238, 640.902}

 Total Axial Torque (Tz)
 Primary Disk                    : 31.9252
 Intermediate Disk               : 1197.03
 Secondary Disk                  : -1199.99

 Torque Ratio: Ds/Dp             : 37.5876
 Torque Ratio: Di/Dp             : 37.4949
 Torque Ratio: Di/Ds             : 0.997534

 Tosional Stiffness (T/rad)      : 155718.

 Average Residual Force          : {-0.00344892, 0.138307, -0.0247179
                                                          -6
 Average Displacement Residual   : 1.35503 10

 Dp Speed                        : 10.
 Ds Speed                        : 0.27027
 Speed Conversion Ratio          : 37.
 Effective N.D. Speed            : 20.
 Minimum Expected Average Life
                                                  7
                          hours  : 2.23048 10
                          years  : 2546.21

  Average Load-Life Factor: Dp   : 9.34973
  Average Load-Life Factor: Di   : 15.2908
  Average Load-Life Factor: Ds   : 7.9515
```

```
==========================
Summary of Extreme Values
==========================

 Maximum Compressive Contact Stress Dp : -239067.
 At ball number                        : 35
 Maximum Compressive Contact Stress Di : -201557.
 At ball number                        : 7
 Maximum Compressive Contact Stress Ds : -245705.
 At ball number                        : 36

 Maximum Ball Deflection Dp            : 0.000134318
 At ball number                        : 35
 Maximum Ball Deflection Di            : 0.0000954798
 At ball number                        : 7
 Maximum Ball Deflection Ds            : 0.000148643
 At ball number                        : 35

 Maximum Ball Contact Area Dp          : 0.000152666
 At ball number                        : 35
 Maximum Ball Contact Area Di          : 0.000108526
 At ball number                        : 7
 Maximum Ball Contact Area Ds          : 0.000168966
 At ball number                        : 35

 Maximum Ball a-patch Dp               : 0.0199915
 At ball number                        : 35
 Maximum Ball a-patch Di               : 0.0168552
 At ball number                        : 7
 Maximum Ball a-patch Ds               : 0.0210305
 At ball number                        : 35

 Maximum Ball b-patch Dp               : 0.0024308
 At ball number                        : 35
 Maximum Ball b-patch Di               : 0.00204952
 At ball number                        : 7
 Maximum Ball b-patch Ds               : 0.00255741
 At ball number                        : 35

 Minimum Distance to Dp Corner         : 0.0139394
 At ball number                        : 35
 Minimum Distance to Di Corner: Dp     : 0.00939482
 At ball number                        : 7
 Minimum Distance to Di Corner: Ds     : 0.00939482
 At ball number                        : 7
 Minimum Distance to Ds Corner         : 0.0129004
 At ball number                        : 35

==========================
==========================
```

SYNKdrive^{tm} Speed Conversion Technology

Analytical and Numerical Results

Precision Speed Reducer for Robotics and Manufacturing (TRP-93-009)

Conforming Race Design
Conforming Percentage: 52%
Flank Angle: 50 degrees
Applied Torque: 1200 in-lbs

1.0 Geometric Definition

```
Summary of Conforming Race Parameters
-------------------------------------
BallDiameter                        = 0.15625

ConformingDiameter                  = 0.1625
ConformingPercentage                = 52.

PrimaryFlankAngleDegrees            = 50.
IntermediateFlankAngleDegrees       = 0.
SecondaryFlankAngleDegrees          = 50.

PrimaryFractionBallDepth            = 0.3
SecondaryFractionBallDepth          = 0.3

ToleranceFraction                   = 0.01

ContactToCornerDistance for Dp = 0.0444894
ContactToCornerDistance for Ds = 0.0444894
```

```
Summary of Primary Disk Parameters
-----------------------------------
PrimaryDiskThickness            = 0.5
PrimaryDiskDiameter             = 6.

PrimaryRadiusMax                = 2.5
PrimaryRadiusMin                = 2.28125
PrimaryDisplacement             = 0.21875

PrimaryPhiIncrement             = 180.
PrimaryNumberLobes              = 1


Summary of Intermediate Disk Parameters
---------------------------------------
IntermediateDiskThickness       = 0.0525
IntermediateDiskDiameter        = 6.

IntermediateRadiusMax           = 2.5
IntermediateRadiusMin           = 2.28125
IntermediateDisplacement        = 0.21875
IntermediateSlotWidth           = 0.15625

IntermediateTotalSlots          = 36
IntermediateGammaIncrement      = 10.


Summary of Secondary Disk Parameters
-----------------------------------
SecondaryDiskThickness          = 0.5
SecondaryDiskDiameter           = 6.

SecondaryRadiusMax              = 2.5
SecondaryRadiusMin              = 2.28125
SecondaryDisplacement           = 0.21875

SecondaryPhiIncrement           = 4.86486
SecondaryNumberLobes            = 37
```

2.0 Ball Race Section Profile

Primary and Secondary Race Profiles

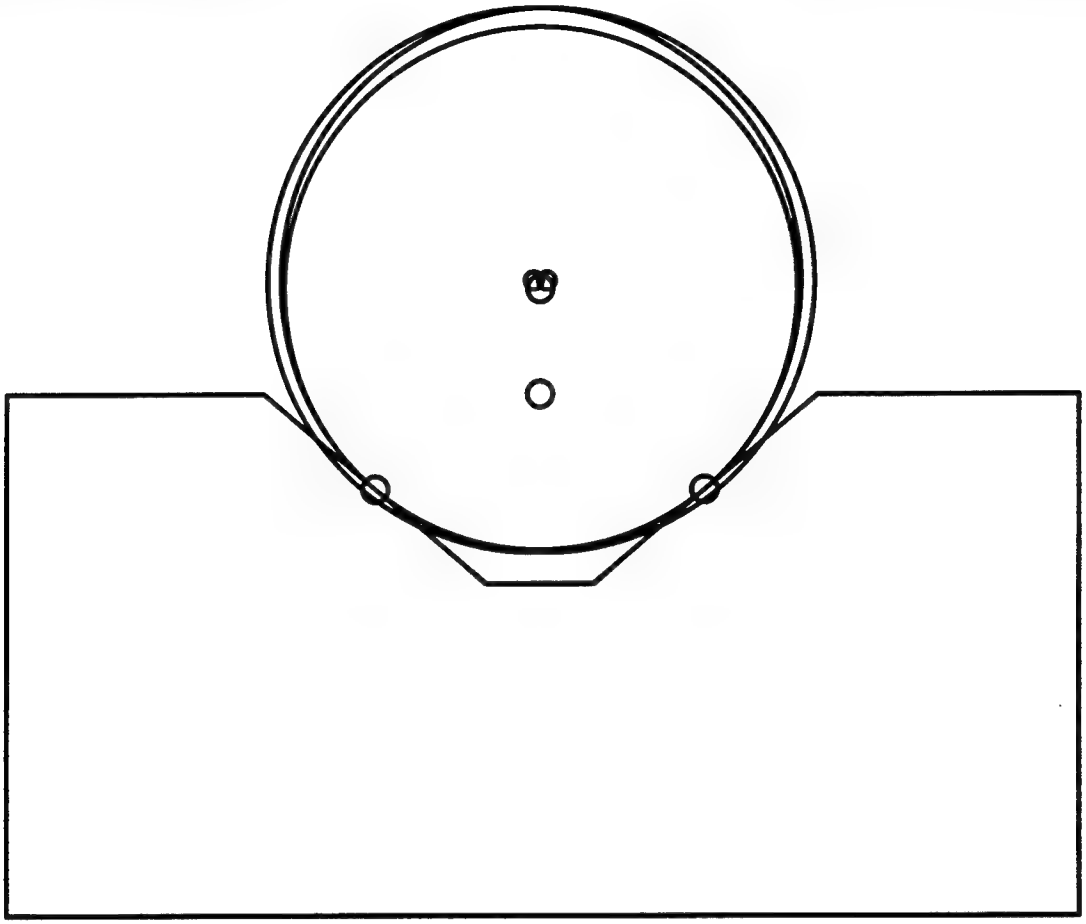

3.0 Constraints and Kinematic Results

```
Summary of Drive Constraint Parameters
--------------------------------------
PrimaryNumberLobes              = 1
SecondaryNumberLobes            = 37
IntermediateTotalSlots          = 36 (requested balls)

BallConjugateDirection          = forward drive
BallConstraintCondition         = exactly constrained

Conjugate constraints           = 36
Forward drive condition         = 36
Reverser drive condition        = 38
Predicted speed ratio           = 37 to 1


Summary of Kinematic Solver Results
-----------------------------------
PrimaryAngleStart               = 0.
PrimaryAngleFinish              = 5.
PrimaryAngleDelta               = 1.
PrimaryAngleNumber              = 6.
Speed Conversion Ratio (Dp:Ds)  = 37. to 1

PrimaryDiskDeltaAngle:
   Step          Dp Angle          Ds Angle
   ----          --------          --------
                                           -17
    1              0.              2.77556 10
    2              1.              0.027027
    3              2.              0.0540541
    4              3.              0.0810811
    5              4.              0.108108
    6              5.              0.135135
```

4.0 Numerical Results

```
================================================
Summary of Stress and Displacement Calculations
================================================
 Calculated for kinematic solution : 6
 Angular Deformation               : 0.506528
 Applied Torque                    : 1199.91
```

```
=========================
 Ball number          : 1
 Ball angle           : 350.
 Ball position        : {-0.21683, 2.47838, 0.}
 Solution current?    : Yes
 Ball activity        : ON
 Ball request         : solve
 Cross over angle          : 31.0786
 Residual Force Vector     : {0.63446, 0.10761, 0.0739486}
                                        -6
 Displacement Residual     : 2.34541 10
****
 Contact name              : DpCo
  Max Normal Load          : 25.6215
  Max Normal Stress        : -243615.
  Displacement             : 0.000139492
  Contact a-length         : 0.0203728
  Contact b-length         : 0.00247734
  Contact area             : 0.000158557
  Distance to Corner       : 0.0241166
  Effective Speed Factor   : 2.659
  Load-Life Factor         : 8.30241
                                      7
  Expected Average Life    : 1.80551 10
****
 Contact name              : DiCi
  Max Normal Load          : 15.214
  Max Normal Stress        : -202001.
  Displacement             : 0.0000959007
  Contact a-length         : 0.0168923
  Contact b-length         : 0.00205403
  Contact area             : 0.000109005
  Distance to Corner: Dp   : 0.00935771
  Distance to Corner: Ds   : 0.00935771
  Effective Speed Factor   : 2.659
  Load-Life Factor         : 13.9818
                                      8
  Expected Average Life    : 1.45225 10
****
 Contact name              : DsCi
  Max Normal Load          : 28.8803
  Max Normal Stress        : -253767.
  Displacement             : 0.000151335
  Contact a-length         : 0.0212201
  Contact b-length         : 0.00258008
  Contact area             : 0.000172001
  Distance to Corner       : 0.0232692
  Effective Speed Factor   : 2.659
  Load-Life Factor         : 7.36557
                                      7
  Expected Average Life    : 1.11843 10
```

```
=========================
 Ball number          : 2
 Ball angle           : 340.
 Ball position        : {-0.640757, 2.39134, 0.}
 Solution current?    : Yes
 Ball activity        : ON
 Ball request         : solve
 Cross over angle          : 31.1588
 Residual Force Vector     : {0.598097, 0.214683, 0.0716419}
                                          -6
 Displacement Residual     : 2.31692 10
****
 Contact name              : DpCo
  Max Normal Load          : 25.5545
  Max Normal Stress        : -243403.
  Displacement             : 0.000139248
  Contact a-length         : 0.020355
  Contact b-length         : 0.00247518
  Contact area             : 0.000158281
  Distance to Corner       : 0.0241343
  Effective Speed Factor   : 2.659
  Load-Life Factor         : 8.32416
                                        7
  Expected Average Life    : 1.82451 10
****
 Contact name              : DiCi
  Max Normal Load          : 15.2111
  Max Normal Stress        : -202018.
  Displacement             : 0.000095917
  Contact a-length         : 0.0168937
  Contact b-length         : 0.00205421
  Contact area             : 0.000109023
  Distance to Corner: Dp   : 0.00935627
  Distance to Corner: Ds   : 0.00935627
  Effective Speed Factor   : 2.659
  Load-Life Factor         : 13.9845
                                        8
  Expected Average Life    : 1.45337 10
****
 Contact name              : DsCi
  Max Normal Load          : 28.8278
  Max Normal Stress        : -253604.
  Displacement             : 0.000151141
  Contact a-length         : 0.0212066
  Contact b-length         : 0.00257843
  Contact area             : 0.000171781
  Distance to Corner       : 0.0232828
  Effective Speed Factor   : 2.659
  Load-Life Factor         : 7.379
                                        7
  Expected Average Life    : 1.12661 10
```

```
==========================
 Ball number          : 3
 Ball angle           : 330.
 Ball position        : {-1.04114, 2.23273, 0.}
 Solution current?    : Yes
 Ball activity        : ON
 Ball request         : solve
 Cross over angle          : 31.2394
 Residual Force Vector     : {0.54407, 0.312424, 0.0693453}
                                                  -6
 Displacement Residual     : 2.28844 10
****
 Contact name              : DpCo
  Max Normal Load          : 25.4873
  Max Normal Stress        : -243189.
  Displacement             : 0.000139004
  Contact a-length         : 0.0203372
  Contact b-length         : 0.002473
  Contact area             : 0.000158003
  Distance to Corner       : 0.0241522
  Effective Speed Factor   : 2.659
  Load-Life Factor         : 8.34611
                                      7
  Expected Average Life    : 1.84383 10
****
 Contact name              : DiCi
  Max Normal Load          : 15.208
  Max Normal Stress        : -202034.
  Displacement             : 0.0000959326
  Contact a-length         : 0.0168951
  Contact b-length         : 0.00205437
  Contact area             : 0.000109041
  Distance to Corner: Dp   : 0.0093549
  Distance to Corner: Ds   : 0.0093549
  Effective Speed Factor   : 2.659
  Load-Life Factor         : 13.9874
                                      8
  Expected Average Life    : 1.45455 10
****
 Contact name              : DsCi
  Max Normal Load          : 28.775
  Max Normal Stress        : -253441.
  Displacement             : 0.000150947
  Contact a-length         : 0.0211929
  Contact b-length         : 0.00257677
  Contact area             : 0.00017156
  Distance to Corner       : 0.0232965
  Effective Speed Factor   : 2.659
  Load-Life Factor         : 7.39253
                                      7
  Expected Average Life    : 1.1349 10
```

```
=========================
 Ball number          : 4
 Ball angle           : 320.
 Ball position        : {-1.40606, 2.00806, 0.}
 Solution current?    : Yes
 Ball activity        : ON
 Ball request         : solve
 Cross over angle          : 31.3203
 Residual Force Vector     : {0.474509, 0.397995, 0.0670594}
                                          -6
 Displacement Residual     : 2.25997 10
****
 Contact name              : DpCo
  Max Normal Load          : 25.4199
  Max Normal Stress        : -242974.
  Displacement             : 0.000138758
  Contact a-length         : 0.0203192
  Contact b-length         : 0.00247082
  Contact area             : 0.000157724
  Distance to Corner       : 0.0241702
  Effective Speed Factor   : 2.659
  Load-Life Factor         : 8.36826
                                       7
  Expected Average Life    : 1.86348 10
****
 Contact name              : DiCi
  Max Normal Load          : 15.2047
  Max Normal Stress        : -202050.
  Displacement             : 0.0000959475
  Contact a-length         : 0.0168964
  Contact b-length         : 0.00205453
  Contact area             : 0.000109058
  Distance to Corner: Dp   : 0.00935359
  Distance to Corner: Ds   : 0.00935359
  Effective Speed Factor   : 2.659
  Load-Life Factor         : 13.9904
                                       8
  Expected Average Life    : 1.4558 10
****
 Contact name              : DsCi
  Max Normal Load          : 28.7219
  Max Normal Stress        : -253277.
  Displacement             : 0.000150751
  Contact a-length         : 0.0211792
  Contact b-length         : 0.0025751
  Contact area             : 0.000171338
  Distance to Corner       : 0.0233102
  Effective Speed Factor   : 2.659
  Load-Life Factor         : 7.40618
                                       7
  Expected Average Life    : 1.1433 10
```

```
=========================
 Ball number         : 5
 Ball angle          : 310.
 Ball position       : {-1.7248, 1.7248, 0.}
 Solution current?   : Yes
 Ball activity       : ON
 Ball request        : solve
 Cross over angle          : 31.4015
 Residual Force Vector     : {0.391982, 0.469012, 0.0647845}
                                                  -6
 Displacement Residual     : 2.23151 10
****
 Contact name              : DpCo
  Max Normal Load          : 25.3521
  Max Normal Stress        : -242758.
  Displacement             : 0.000138511
  Contact a-length         : 0.0203011
  Contact b-length         : 0.00246862
  Contact area             : 0.000157443
  Distance to Corner       : 0.0241883
  Effective Speed Factor   : 2.659
  Load-Life Factor         : 8.39061
                                       7
  Expected Average Life    : 1.88347 10
****
 Contact name              : DiCi
  Max Normal Load          : 15.2013
  Max Normal Stress        : -202065.
  Displacement             : 0.0000959616
  Contact a-length         : 0.0168976
  Contact b-length         : 0.00205468
  Contact area             : 0.000109074
  Distance to Corner: Dp   : 0.00935235
  Distance to Corner: Ds   : 0.00935235
  Effective Speed Factor   : 2.659
  Load-Life Factor         : 13.9935
                                       8
  Expected Average Life    : 1.45712 10
****
 Contact name              : DsCi
  Max Normal Load          : 28.6687
  Max Normal Stress        : -253111.
  Displacement             : 0.000150554
  Contact a-length         : 0.0211653
  Contact b-length         : 0.00257342
  Contact area             : 0.000171114
  Distance to Corner       : 0.023324
  Effective Speed Factor   : 2.659
  Load-Life Factor         : 7.41995
                                       7
  Expected Average Life    : 1.15183 10
```

```
=========================
 Ball number         : 6
 Ball angle          : 300.
 Ball position       : {-1.98815, 1.39212, 0.}
 Solution current?   : Yes
 Ball activity       : ON
 Ball request        : solve
 Cross over angle          : 31.483
 Residual Force Vector     : {0.29941, 0.52361, 0.0625213}
                                      -6
 Displacement Residual     : 2.20306 10
****
 Contact name              : DpCo
  Max Normal Load          : 25.2842
  Max Normal Stress        : -242541.
  Displacement             : 0.000138263
  Contact a-length         : 0.0202829
  Contact b-length         : 0.00246641
  Contact area             : 0.000157161
  Distance to Corner       : 0.0242064
  Effective Speed Factor   : 2.659
  Load-Life Factor         : 8.41316
                                    7
  Expected Average Life    : 1.9038 10
****
 Contact name              : DiCi
  Max Normal Load          : 15.1977
  Max Normal Stress        : -202079.
  Displacement             : 0.000095975
  Contact a-length         : 0.0168988
  Contact b-length         : 0.00205483
  Contact area             : 0.000109089
  Distance to Corner: Dp   : 0.00935117
  Distance to Corner: Ds   : 0.00935117
  Effective Speed Factor   : 2.659
  Load-Life Factor         : 13.9969
                                    8
  Expected Average Life    : 1.4585 10
****
 Contact name              : DsCi
  Max Normal Load          : 28.6151
  Max Normal Stress        : -252945.
  Displacement             : 0.000150357
  Contact a-length         : 0.0211514
  Contact b-length         : 0.00257173
  Contact area             : 0.00017089
  Distance to Corner       : 0.0233379
  Effective Speed Factor   : 2.659
  Load-Life Factor         : 7.43384
                                    7
  Expected Average Life    : 1.16047 10
```

```
=========================
 Ball number          : 7
 Ball angle           : 290.
 Ball position        : {-2.18867, 1.02059, 0.}
 Solution current?    : Yes
 Ball activity        : ON
 Ball request         : solve
 Cross over angle          : 31.5649
 Residual Force Vector     : {0.199958, 0.560492, 0.0602703}
                                          -6
 Displacement Residual     : 2.17463 10
****
 Contact name              : DpCo
  Max Normal Load          : 25.216
  Max Normal Stress        : -242322.
  Displacement             : 0.000138014
  Contact a-length         : 0.0202647
  Contact b-length         : 0.00246418
  Contact area             : 0.000156878
  Distance to Corner       : 0.0242247
  Effective Speed Factor   : 2.659
  Load-Life Factor         : 8.43592
                                        7
  Expected Average Life    : 1.92448 10
****
 Contact name              : DiCi
  Max Normal Load          : 15.1939
  Max Normal Stress        : -202092.
  Displacement             : 0.0000959876
  Contact a-length         : 0.0168999
  Contact b-length         : 0.00205496
  Contact area             : 0.000109104
  Distance to Corner: Dp   : 0.00935006
  Distance to Corner: Ds   : 0.00935006
  Effective Speed Factor   : 2.659
  Load-Life Factor         : 14.0003
                                        8
  Expected Average Life    : 1.45995 10
****
 Contact name              : DsCi
  Max Normal Load          : 28.5613
  Max Normal Stress        : -252778.
  Displacement             : 0.000150158
  Contact a-length         : 0.0211375
  Contact b-length         : 0.00257003
  Contact area             : 0.000170664
  Distance to Corner       : 0.0233519
  Effective Speed Factor   : 2.659
  Load-Life Factor         : 7.44784
                                        7
  Expected Average Life    : 1.16924 10
```

```
=========================
 Ball number          : 8
 Ball angle           : 280.
 Ball position        : {-2.32091, 0.621885, 0.}
 Solution current?    : Yes
 Ball activity        : ON
 Ball request         : solve
 Cross over angle          : 31.6471
 Residual Force Vector     : {0.0969321, 0.578956, 0.0580318}
                                        -6
 Displacement Residual     : 2.14621 10
****
 Contact name              : DpCo
  Max Normal Load          : 25.1475
  Max Normal Stress        : -242102.
  Displacement             : 0.000137764
  Contact a-length         : 0.0202463
  Contact b-length         : 0.00246195
  Contact area             : 0.000156593
  Distance to Corner       : 0.0242431
  Effective Speed Factor   : 2.659
  Load-Life Factor         : 8.45888
                                      7
  Expected Average Life    : 1.94552 10
****
 Contact name              : DiCi
  Max Normal Load          : 15.19
  Max Normal Stress        : -202105.
  Displacement             : 0.0000959995
  Contact a-length         : 0.016901
  Contact b-length         : 0.00205509
  Contact area             : 0.000109117
  Distance to Corner: Dp   : 0.00934901
  Distance to Corner: Ds   : 0.00934901
  Effective Speed Factor   : 2.659
  Load-Life Factor         : 14.004
                                      8
  Expected Average Life    : 1.46146 10
****
 Contact name              : DsCi
  Max Normal Load          : 28.5072
  Max Normal Stress        : -252610.
  Displacement             : 0.000149958
  Contact a-length         : 0.0211234
  Contact b-length         : 0.00256832
  Contact area             : 0.000170437
  Distance to Corner       : 0.023366
  Effective Speed Factor   : 2.659
  Load-Life Factor         : 7.46197
                                      7
  Expected Average Life    : 1.17814 10
```

```
=========================
 Ball number         : 9
 Ball angle          : 270.
 Ball position       : {-2.38153, 0.208357, 0.}
 Solution current?   : Yes
 Ball activity       : ON
 Ball request        : solve
 Cross over angle         : 31.7297
 Residual Force Vector    : {-0.00633267, 0.578903, 0.0558065}
                                      -6
 Displacement Residual    : 2.11782 10
****
 Contact name             : DpCo
  Max Normal Load         : 25.0788
  Max Normal Stress       : -241881.
  Displacement            : 0.000137513
  Contact a-length        : 0.0202278
  Contact b-length        : 0.0024597
  Contact area            : 0.000156308
  Distance to Corner      : 0.0242616
  Effective Speed Factor  : 2.659
  Load-Life Factor        : 8.48205
                                    7
  Expected Average Life   : 1.96692 10
****
 Contact name             : DiCi
  Max Normal Load         : 15.1859
  Max Normal Stress       : -202116.
  Displacement            : 0.0000960107
  Contact a-length        : 0.016902
  Contact b-length        : 0.00205521
  Contact area            : 0.00010913
  Distance to Corner: Dp  : 0.00934803
  Distance to Corner: Ds  : 0.00934803
  Effective Speed Factor  : 2.659
  Load-Life Factor        : 14.0078
                                    8
  Expected Average Life   : 1.46304 10
****
 Contact name             : DsCi
  Max Normal Load         : 28.4529
  Max Normal Stress       : -252441.
  Displacement            : 0.000149758
  Contact a-length        : 0.0211093
  Contact b-length        : 0.0025666
  Contact area            : 0.000170209
  Distance to Corner      : 0.0233801
  Effective Speed Factor  : 2.659
  Load-Life Factor        : 7.47621
                                    7
  Expected Average Life   : 1.18716 10
```

```
==========================
 Ball number          : 10
 Ball angle           : 260.
 Ball position        : {-2.36942, -0.207298, 0.}
 Solution current?    : Yes
 Ball activity        : ON
 Ball request         : solve
 Cross over angle          : 31.8125
 Residual Force Vector     : {-0.106578, 0.560825, 0.0535949}
                                                  -6
 Displacement Residual     : 2.08945 10
****
 Contact name              : DpCo
  Max Normal Load          : 25.0099
  Max Normal Stress        : -241659.
  Displacement             : 0.00013726
  Contact a-length         : 0.0202092
  Contact b-length         : 0.00245744
  Contact area             : 0.00015602
  Distance to Corner       : 0.0242802
  Effective Speed Factor   : 2.659
  Load-Life Factor         : 8.50543
                                    7
  Expected Average Life    : 1.9887 10
****
 Contact name              : DiCi
  Max Normal Load          : 15.1816
  Max Normal Stress        : -202127.
  Displacement             : 0.000096021
  Contact a-length         : 0.0169029
  Contact b-length         : 0.00205532
  Contact area             : 0.000109142
  Distance to Corner: Dp   : 0.00934712
  Distance to Corner: Ds   : 0.00934712
  Effective Speed Factor   : 2.659
  Load-Life Factor         : 14.0117
                                    8
  Expected Average Life    : 1.4647 10
****
 Contact name              : DsCi
  Max Normal Load          : 28.3983
  Max Normal Stress        : -252271.
  Displacement             : 0.000149556
  Contact a-length         : 0.021095
  Contact b-length         : 0.00256487
  Contact area             : 0.000169979
  Distance to Corner       : 0.0233944
  Effective Speed Factor   : 2.659
  Load-Life Factor         : 7.49058
                                    7
  Expected Average Life    : 1.19631 10
```

```
=========================
 Ball number          : 11
 Ball angle           : 250.
 Ball position        : {-2.28569, -0.612449, 0.}
 Solution current?    : Yes
 Ball activity        : ON
 Ball request         : solve
 Cross over angle          : 31.8957
 Residual Force Vector     : {-0.200725, 0.525777, 0.0513974}
                                        -6
 Displacement Residual     : 2.06111 10
****
 Contact name              : DpCo
  Max Normal Load          : 24.9407
  Max Normal Stress        : -241436.
  Displacement             : 0.000137006
  Contact a-length         : 0.0201905
  Contact b-length         : 0.00245516
  Contact area             : 0.000155732
  Distance to Corner       : 0.0242989
  Effective Speed Factor   : 2.659
  Load-Life Factor         : 8.52903
                                      7
  Expected Average Life    : 2.01086 10
****
 Contact name              : DiCi
  Max Normal Load          : 15.1771
  Max Normal Stress        : -202137.
  Displacement             : 0.0000960306
  Contact a-length         : 0.0169037
  Contact b-length         : 0.00205542
  Contact area             : 0.000109152
  Distance to Corner: Dp   : 0.00934628
  Distance to Corner: Ds   : 0.00934628
  Effective Speed Factor   : 2.659
  Load-Life Factor         : 14.0158
                                      8
  Expected Average Life    : 1.46642 10
****
 Contact name              : DsCi
  Max Normal Load          : 28.3435
  Max Normal Stress        : -252099.
  Displacement             : 0.000149353
  Contact a-length         : 0.0210807
  Contact b-length         : 0.00256313
  Contact area             : 0.000169749
  Distance to Corner       : 0.0234087
  Effective Speed Factor   : 2.659
  Load-Life Factor         : 7.50507
                                      7
  Expected Average Life    : 1.2056 10
```

```
=========================
 Ball number          : 12
 Ball angle           : 240.
 Ball position        : {-2.1336, -0.994914, 0.}
 Solution current?    : Yes
 Ball activity        : ON
 Ball request         : solve
 Cross over angle          : 31.9793
 Residual Force Vector     : {-0.285973, 0.475326, 0.0492147}
                                        -6
 Displacement Residual     : 2.0328 10
****
 Contact name              : DpCo
  Max Normal Load          : 24.8713
  Max Normal Stress        : -241211.
  Displacement             : 0.000136751
  Contact a-length         : 0.0201717
  Contact b-length         : 0.00245288
  Contact area             : 0.000155442
  Distance to Corner       : 0.0243177
  Effective Speed Factor   : 2.659
  Load-Life Factor         : 8.55284
                                       7
  Expected Average Life    : 2.03341 10
****
 Contact name              : DiCi
  Max Normal Load          : 15.1725
  Max Normal Stress        : -202147.
  Displacement             : 0.0000960394
  Contact a-length         : 0.0169045
  Contact b-length         : 0.00205552
  Contact area             : 0.000109162
  Distance to Corner: Dp   : 0.0093455
  Distance to Corner: Ds   : 0.0093455
  Effective Speed Factor   : 2.659
  Load-Life Factor         : 14.0201
                                       8
  Expected Average Life    : 1.46821 10
****
 Contact name              : DsCi
  Max Normal Load          : 28.2884
  Max Normal Stress        : -251927.
  Displacement             : 0.000149149
  Contact a-length         : 0.0210663
  Contact b-length         : 0.00256138
  Contact area             : 0.000169517
  Distance to Corner       : 0.023423
  Effective Speed Factor   : 2.659
  Load-Life Factor         : 7.51969
                                       7
  Expected Average Life    : 1.21502 10
```

```
=========================
 Ball number          : 13
 Ball angle           : 230.
 Ball position        : {-1.91847, -1.34332, 0.}
 Solution current?    : Yes
 Ball activity        : ON
 Ball request         : solve
 Cross over angle          : 32.0631
 Residual Force Vector     : {-0.359875, 0.411489, 0.0470471}
                                      -6
 Displacement Residual     : 2.00453 10
****
 Contact name              : DpCo
  Max Normal Load          : 24.8016
  Max Normal Stress        : -240985.
  Displacement             : 0.000136495
  Contact a-length         : 0.0201528
  Contact b-length         : 0.00245058
  Contact area             : 0.000155151
  Distance to Corner       : 0.0243366
  Effective Speed Factor   : 2.659
  Load-Life Factor         : 8.57687
                                        7
  Expected Average Life    : 2.05636 10
****
 Contact name              : DiCi
  Max Normal Load          : 15.1677
  Max Normal Stress        : -202155.
  Displacement             : 0.0000960474
  Contact a-length         : 0.0169052
  Contact b-length         : 0.0020556
  Contact area             : 0.000109172
  Distance to Corner: Dp   : 0.0093448
  Distance to Corner: Ds   : 0.0093448
  Effective Speed Factor   : 2.659
  Load-Life Factor         : 14.0245
                                        8
  Expected Average Life    : 1.47007 10
****
 Contact name              : DsCi
  Max Normal Load          : 28.233
  Max Normal Stress        : -251754.
  Displacement             : 0.000148944
  Contact a-length         : 0.0210519
  Contact b-length         : 0.00255963
  Contact area             : 0.000169284
  Distance to Corner       : 0.0234375
  Effective Speed Factor   : 2.659
  Load-Life Factor         : 7.53444
                                        7
  Expected Average Life    : 1.22458 10
```

```
=========================
 Ball number          : 14
 Ball angle           : 220.
 Ball position        : {-1.64746, -1.64746, 0.}
 Solution current?    : Yes
 Ball activity        : ON
 Ball request         : solve
 Cross over angle          : 32.1474
 Residual Force Vector     : {-0.420417, 0.336657, 0.0448954}
                                        -6
 Displacement Residual     : 1.97629 10
****
 Contact name              : DpCo
  Max Normal Load          : 24.7317
  Max Normal Stress        : -240757.
  Displacement             : 0.000136237
  Contact a-length         : 0.0201338
  Contact b-length         : 0.00244827
  Contact area             : 0.000154858
  Distance to Corner       : 0.0243556
  Effective Speed Factor   : 2.659
  Load-Life Factor         : 8.60112
                                       7
  Expected Average Life    : 2.07971 10
****
 Contact name              : DiCi
  Max Normal Load          : 15.1627
  Max Normal Stress        : -202162.
  Displacement             : 0.0000960546
  Contact a-length         : 0.0169058
  Contact b-length         : 0.00205568
  Contact area             : 0.00010918
  Distance to Corner: Dp   : 0.00934416
  Distance to Corner: Ds   : 0.00934416
  Effective Speed Factor   : 2.659
  Load-Life Factor         : 14.0292
                                       8
  Expected Average Life    : 1.47201 10
****
 Contact name              : DsCi
  Max Normal Load          : 28.1774
  Max Normal Stress        : -251580.
  Displacement             : 0.000148739
  Contact a-length         : 0.0210373
  Contact b-length         : 0.00255786
  Contact area             : 0.00016905
  Distance to Corner       : 0.0234521
  Effective Speed Factor   : 2.659
  Load-Life Factor         : 7.54931
                                       7
  Expected Average Life    : 1.23428 10
```

```
==========================
 Ball number          : 15
 Ball angle           : 210.
 Ball position        : {-1.32938, -1.89856, 0.}
 Solution current?    : Yes
 Ball activity        : ON
 Ball request         : solve
 Cross over angle          : 32.2319
 Residual Force Vector     : {-0.466064, 0.253506, 0.04276}
                                                  -6
 Displacement Residual     : 1.94809 10
****
 Contact name              : DpCo
  Max Normal Load          : 24.6615
  Max Normal Stress        : -240529.
  Displacement             : 0.000135979
  Contact a-length         : 0.0201147
  Contact b-length         : 0.00244594
  Contact area             : 0.000154564
  Distance to Corner       : 0.0243747
  Effective Speed Factor   : 2.659
  Load-Life Factor         : 8.62559
                                       7
  Expected Average Life    : 2.10348 10
****
 Contact name              : DiCi
  Max Normal Load          : 15.1575
  Max Normal Stress        : -202169.
  Displacement             : 0.000096061
  Contact a-length         : 0.0169064
  Contact b-length         : 0.00205575
  Contact area             : 0.000109187
  Distance to Corner: Dp   : 0.0093436
  Distance to Corner: Ds   : 0.0093436
  Effective Speed Factor   : 2.659
  Load-Life Factor         : 14.0339
                                       8
  Expected Average Life    : 1.47402 10
****
 Contact name              : DsCi
  Max Normal Load          : 28.1215
  Max Normal Stress        : -251405.
  Displacement             : 0.000148532
  Contact a-length         : 0.0210227
  Contact b-length         : 0.00255608
  Contact area             : 0.000168815
  Distance to Corner       : 0.0234667
  Effective Speed Factor   : 2.659
  Load-Life Factor         : 7.56431
                                       7
  Expected Average Life    : 1.24412 10
```

```
========================
 Ball number         : 16
 Ball angle          : 200.
 Ball position       : {-0.97437, -2.08954, 0.}
 Solution current?   : Yes
 Ball activity       : ON
 Ball request        : solve
 Cross over angle          : 32.3168
 Residual Force Vector     : {-0.495801, 0.164905, 0.0406414}
                                          -6
 Displacement Residual     : 1.91993 10
****
 Contact name              : DpCo
  Max Normal Load          : 24.5911
  Max Normal Stress        : -240299.
  Displacement             : 0.000135719
  Contact a-length         : 0.0200955
  Contact b-length         : 0.0024436
  Contact area             : 0.000154269
  Distance to Corner       : 0.0243939
  Effective Speed Factor   : 2.659
  Load-Life Factor         : 8.65028
                                        7
  Expected Average Life    : 2.12767 10
****
 Contact name              : DiCi
  Max Normal Load          : 15.1522
  Max Normal Stress        : -202175.
  Displacement             : 0.0000960665
  Contact a-length         : 0.0169069
  Contact b-length         : 0.00205581
  Contact area             : 0.000109193
  Distance to Corner: Dp   : 0.00934311
  Distance to Corner: Ds   : 0.00934311
  Effective Speed Factor   : 2.659
  Load-Life Factor         : 14.0389
                                       8
  Expected Average Life    : 1.4761 10
****
 Contact name              : DsCi
  Max Normal Load          : 28.0654
  Max Normal Stress        : -251229.
  Displacement             : 0.000148324
  Contact a-length         : 0.0210079
  Contact b-length         : 0.00255429
  Contact area             : 0.000168579
  Distance to Corner       : 0.0234814
  Effective Speed Factor   : 2.659
  Load-Life Factor         : 7.57944
                                       7
  Expected Average Life    : 1.2541 10
```

```
=========================
 Ball number          : 17
 Ball angle           : 190.
 Ball position        : {-0.593576, -2.21526, 0.}
 Solution current?    : Yes
 Ball activity        : ON
 Ball request         : solve
 Cross over angle          : 32.402
 Residual Force Vector     : {-0.509149, 0.0738156, 0.0385403}
                                        -6
 Displacement Residual     : 1.89182 10
****
 Contact name              : DpCo
  Max Normal Load          : 24.5205
  Max Normal Stress        : -240068.
  Displacement             : 0.000135458
  Contact a-length         : 0.0200761
  Contact b-length         : 0.00244125
  Contact area             : 0.000153972
  Distance to Corner       : 0.0244133
  Effective Speed Factor   : 2.659
  Load-Life Factor         : 8.6752
                                      7
  Expected Average Life    : 2.1523 10
****
 Contact name              : DiCi
  Max Normal Load          : 15.1467
  Max Normal Stress        : -202180.
  Displacement             : 0.0000960713
  Contact a-length         : 0.0169073
  Contact b-length         : 0.00205586
  Contact area             : 0.000109199
  Distance to Corner: Dp   : 0.0093427
  Distance to Corner: Ds   : 0.0093427
  Effective Speed Factor   : 2.659
  Load-Life Factor         : 14.044
                                        8
  Expected Average Life    : 1.47826 10
****
 Contact name              : DsCi
  Max Normal Load          : 28.009
  Max Normal Stress        : -251052.
  Displacement             : 0.000148115
  Contact a-length         : 0.0209931
  Contact b-length         : 0.00255249
  Contact area             : 0.000168341
  Distance to Corner       : 0.0234962
  Effective Speed Factor   : 2.659
  Load-Life Factor         : 7.59471
                                      7
  Expected Average Life    : 1.26424 10
```

```
==========================
 Ball number          : 18
 Ball angle           : 180.
 Ball position        : {-0.198824, -2.27257, 0.}
 Solution current?    : Yes
 Ball activity        : ON
 Ball request         : solve
 Cross over angle          : 26.5514
 Residual Force Vector     : {-0.178167, 0.00978453, 0.00827376}
                                                  -7
 Displacement Residual     : 7.42278 10
****
 Contact name              : DpCi
  Max Normal Load          : 26.1134
  Max Normal Stress        : -244899.
  Displacement             : 0.000140952
  Contact a-length         : 0.0204792
  Contact b-length         : 0.00249011
  Contact area             : 0.000160207
  Distance to Corner       : 0.0240102
  Effective Speed Factor   : 2.659
  Load-Life Factor         : 8.146
                                        7
  Expected Average Life    : 1.67325 10
****
 Contact name              : DiCi
  Max Normal Load          : 12.9665
  Max Normal Stress        : -193032.
  Displacement             : 0.0000875744
  Contact a-length         : 0.0161423
  Contact b-length         : 0.00196284
  Contact area             : 0.0000995408
  Distance to Corner: Dp   : 0.0101077
  Distance to Corner: Ds   : 0.0101077
  Effective Speed Factor   : 2.659
  Load-Life Factor         : 16.4054
                                        8
  Expected Average Life    : 2.75249 10
****
 Contact name              : DsCo
  Max Normal Load          : 29.8775
  Max Normal Stress        : -256124.
  Displacement             : 0.000154192
  Contact a-length         : 0.0214194
  Contact b-length         : 0.00260471
  Contact area             : 0.000175274
  Distance to Corner       : 0.0230699
  Effective Speed Factor   : 2.659
  Load-Life Factor         : 7.11975
                                        6
  Expected Average Life    : 9.76434 10
```

```
=========================
 Ball number          : 19
 Ball angle           : 170.
 Ball position        : {0.199883, -2.28468, 0.}
 Solution current?    : Yes
 Ball activity        : ON
 Ball request         : solve
 Cross over angle          : 26.4638
 Residual Force Vector     : {-0.176128, -0.0210784, 0.00796297}
                                                  -7
 Displacement Residual     : 7.38873 10
****
 Contact name              : DpCi
  Max Normal Load          : 26.1895
  Max Normal Stress        : -245136.
  Displacement             : 0.000141225
  Contact a-length         : 0.020499
  Contact b-length         : 0.00249252
  Contact area             : 0.000160517
  Distance to Corner       : 0.0239904
  Effective Speed Factor   : 2.659
  Load-Life Factor         : 8.12233
                                        7
  Expected Average Life    : 1.65389 10
****
 Contact name              : DiCi
  Max Normal Load          : 12.9563
  Max Normal Stress        : -192985.
  Displacement             : 0.0000875314
  Contact a-length         : 0.0161384
  Contact b-length         : 0.00196236
  Contact area             : 0.000099492
  Distance to Corner: Dp   : 0.0101116
  Distance to Corner: Ds   : 0.0101116
  Effective Speed Factor   : 2.659
  Load-Life Factor         : 16.4183
                                        8
  Expected Average Life    : 2.76117 10
****
 Contact name              : DsCo
  Max Normal Load          : 29.9415
  Max Normal Stress        : -256305.
  Displacement             : 0.00015441
  Contact a-length         : 0.0214346
  Contact b-length         : 0.00260655
  Contact area             : 0.000175522
  Distance to Corner       : 0.0230548
  Effective Speed Factor   : 2.659
  Load-Life Factor         : 7.10452
                                        6
  Expected Average Life    : 9.68107 10
```

```
==========================
 Ball number         : 20
 Ball angle          : 160.
 Ball position       : {0.596722, -2.227, 0.}
 Solution current?   : Yes
 Ball activity       : ON
 Ball request        : solve
 Cross over angle          : 26.3767
 Residual Force Vector     : {-0.168835, -0.0509537, 0.00766228}
                                          -7
 Displacement Residual     : 7.35539 10
****
 Contact name              : DpCi
  Max Normal Load          : 26.2653
  Max Normal Stress        : -245371.
  Displacement             : 0.000141496
  Contact a-length         : 0.0205187
  Contact b-length         : 0.00249491
  Contact area             : 0.000160825
  Distance to Corner       : 0.0239707
  Effective Speed Factor   : 2.659
  Load-Life Factor         : 8.0989
                                       7
  Expected Average Life    : 1.63489 10
****
 Contact name              : DiCi
  Max Normal Load          : 12.9459
  Max Normal Stress        : -192937.
  Displacement             : 0.0000874876
  Contact a-length         : 0.0161343
  Contact b-length         : 0.00196187
  Contact area             : 0.0000994421
  Distance to Corner: Dp   : 0.0101157
  Distance to Corner: Ds   : 0.0101157
  Effective Speed Factor   : 2.659
  Load-Life Factor         : 16.4314
                                       8
  Expected Average Life    : 2.77003 10
****
 Contact name              : DsCo
  Max Normal Load          : 30.0052
  Max Normal Stress        : -256485.
  Displacement             : 0.000154627
  Contact a-length         : 0.0214496
  Contact b-length         : 0.00260838
  Contact area             : 0.000175769
  Distance to Corner       : 0.0230397
  Effective Speed Factor   : 2.659
  Load-Life Factor         : 7.08943
                                       6
  Expected Average Life    : 9.59908 10
```

```
=========================
 Ball number          : 21
 Ball angle           : 150.
 Ball position        : {0.979506, -2.10056, 0.}
 Solution current?    : Yes
 Ball activity        : ON
 Ball request         : solve
 Cross over angle          : 26.2898
 Residual Force Vector     : {-0.156565, -0.078962, 0.00737127}
                                                  -7
 Displacement Residual     : 7.32273 10
****
 Contact name              : DpCi
  Max Normal Load          : 26.3408
  Max Normal Stress        : -245605.
  Displacement             : 0.000141766
  Contact a-length         : 0.0205383
  Contact b-length         : 0.00249729
  Contact area             : 0.000161132
  Distance to Corner       : 0.0239511
  Effective Speed Factor   : 2.659
  Load-Life Factor         : 8.07569
                                       7
  Expected Average Life    : 1.61623 10
****
 Contact name              : DiCi
  Max Normal Load          : 12.9354
  Max Normal Stress        : -192887.
  Displacement             : 0.0000874429
  Contact a-length         : 0.0161302
  Contact b-length         : 0.00196137
  Contact area             : 0.0000993913
  Distance to Corner: Dp   : 0.0101198
  Distance to Corner: Ds   : 0.0101198
  Effective Speed Factor   : 2.659
  Load-Life Factor         : 16.4448
                                       8
  Expected Average Life    : 2.77906 10
****
 Contact name              : DsCo
  Max Normal Load          : 30.0686
  Max Normal Stress        : -256664.
  Displacement             : 0.000154843
  Contact a-length         : 0.0214646
  Contact b-length         : 0.0026102
  Contact area             : 0.000176014
  Distance to Corner       : 0.0230248
  Effective Speed Factor   : 2.659
  Load-Life Factor         : 7.07448
                                       6
  Expected Average Life    : 9.51834 10
```

```
==========================
 Ball number          : 22
 Ball angle           : 140.
 Ball position        : {1.33635, -1.90851, 0.}
 Solution current?    : Yes
 Ball activity        : ON
 Ball request         : solve
 Cross over angle          : 26.2033
 Residual Force Vector     : {-0.139736, -0.104289, 0.00708955}
                                        -7
 Displacement Residual     : 7.2907 10
****
 Contact name              : DpCi
  Max Normal Load          : 26.416
  Max Normal Stress        : -245838.
  Displacement             : 0.000142035
  Contact a-length         : 0.0205577
  Contact b-length         : 0.00249966
  Contact area             : 0.000161438
  Distance to Corner       : 0.0239316
  Effective Speed Factor   : 2.659
  Load-Life Factor         : 8.0527
                                      7
  Expected Average Life    : 1.5979 10
****
 Contact name              : DiCi
  Max Normal Load          : 12.9247
  Max Normal Stress        : -192837.
  Displacement             : 0.0000873973
  Contact a-length         : 0.016126
  Contact b-length         : 0.00196085
  Contact area             : 0.0000993395
  Distance to Corner: Dp   : 0.010124
  Distance to Corner: Ds   : 0.010124
  Effective Speed Factor   : 2.659
  Load-Life Factor         : 16.4584
                                        8
  Expected Average Life    : 2.78828 10
****
 Contact name              : DsCo
  Max Normal Load          : 30.1318
  Max Normal Stress        : -256841.
  Displacement             : 0.000155058
  Contact a-length         : 0.0214795
  Contact b-length         : 0.00261201
  Contact area             : 0.000176258
  Distance to Corner       : 0.0230099
  Effective Speed Factor   : 2.659
  Load-Life Factor         : 7.05966
                                      6
  Expected Average Life    : 9.43884 10
```

```
=========================
 Ball number          : 23
 Ball angle           : 130.
 Ball position        : {1.65605, -1.65605, 0.}
 Solution current?    : Yes
 Ball activity        : ON
 Ball request         : solve
 Cross over angle          : 26.1172
 Residual Force Vector     : {-0.118902, -0.126208, 0.00681675}
                                                  -7
 Displacement Residual     : 7.25929 10
****
 Contact name              : DpCi
  Max Normal Load          : 26.4909
  Max Normal Stress        : -246069.
  Displacement             : 0.000142302
  Contact a-length         : 0.0205771
  Contact b-length         : 0.00250201
  Contact area             : 0.000161742
  Distance to Corner       : 0.0239123
  Effective Speed Factor   : 2.659
  Load-Life Factor         : 8.02993
                                       7
  Expected Average Life    : 1.57991 10
****
 Contact name              : DiCi
  Max Normal Load          : 12.9138
  Max Normal Stress        : -192786.
  Displacement             : 0.0000873509
  Contact a-length         : 0.0161217
  Contact b-length         : 0.00196033
  Contact area             : 0.0000992868
  Distance to Corner: Dp   : 0.0101283
  Distance to Corner: Ds   : 0.0101283
  Effective Speed Factor   : 2.659
  Load-Life Factor         : 16.4723
                                       8
  Expected Average Life    : 2.79768 10
****
 Contact name              : DsCo
  Max Normal Load          : 30.1946
  Max Normal Stress        : -257018.
  Displacement             : 0.000155271
  Contact a-length         : 0.0214942
  Contact b-length         : 0.00261381
  Contact area             : 0.000176501
  Distance to Corner       : 0.0229951
  Effective Speed Factor   : 2.659
  Load-Life Factor         : 7.04497
                                       6
  Expected Average Life    : 9.36054 10
```

```
=========================
 Ball number          : 24
 Ball angle           : 120.
 Ball position        : {1.92842, -1.35029, 0.}
 Solution current?    : Yes
 Ball activity        : ON
 Ball request         : solve
 Cross over angle          : 26.0314
 Residual Force Vector     : {-0.0947272, -0.144101, 0.00655252}
                                        -7
 Displacement Residual     : 7.22848 10
****
 Contact name              : DpCi
  Max Normal Load          : 26.5655
  Max Normal Stress        : -246300.
  Displacement             : 0.000142569
  Contact a-length         : 0.0205963
  Contact b-length         : 0.00250435
  Contact area             : 0.000162044
  Distance to Corner       : 0.0238931
  Effective Speed Factor   : 2.659
  Load-Life Factor         : 8.00738
                                      7
  Expected Average Life    : 1.56223 10
****
 Contact name              : DiCi
  Max Normal Load          : 12.9028
  Max Normal Stress        : -192734.
  Displacement             : 0.0000873037
  Contact a-length         : 0.0161174
  Contact b-length         : 0.00195981
  Contact area             : 0.0000992332
  Distance to Corner: Dp   : 0.0101326
  Distance to Corner: Ds   : 0.0101326
  Effective Speed Factor   : 2.659
  Load-Life Factor         : 16.4864
                                      8
  Expected Average Life    : 2.80726 10
****
 Contact name              : DsCo
  Max Normal Load          : 30.2571
  Max Normal Stress        : -257194.
  Displacement             : 0.000155483
  Contact a-length         : 0.0215089
  Contact b-length         : 0.0026156
  Contact area             : 0.000176742
  Distance to Corner       : 0.0229804
  Effective Speed Factor   : 2.659
  Load-Life Factor         : 7.03042
                                      6
  Expected Average Life    : 9.28343 10
```

```
==========================
 Ball number          : 25
 Ball angle           : 110.
 Ball position        : {2.14461, -1.00005, 0.}
 Solution current?    : Yes
 Ball activity        : ON
 Ball request         : solve
 Cross over angle          : 25.946
 Residual Force Vector     : {-0.067968, -0.157476, 0.00629653}
                                                  -7
 Displacement Residual     : 7.19822 10
****
 Contact name              : DpCi
  Max Normal Load          : 26.6398
  Max Normal Stress        : -246528.
  Displacement             : 0.000142833
  Contact a-length         : 0.0206155
  Contact b-length         : 0.00250667
  Contact area             : 0.000162345
  Distance to Corner       : 0.0238739
  Effective Speed Factor   : 2.659
  Load-Life Factor         : 7.98504
                                        7
  Expected Average Life    : 1.54487 10
****
 Contact name              : DiCi
  Max Normal Load          : 12.8916
  Max Normal Stress        : -192681.
  Displacement             : 0.0000872558
  Contact a-length         : 0.0161129
  Contact b-length         : 0.00195927
  Contact area             : 0.0000991786
  Distance to Corner: Dp   : 0.0101371
  Distance to Corner: Ds   : 0.0101371
  Effective Speed Factor   : 2.659
  Load-Life Factor         : 16.5007
                                        8
  Expected Average Life    : 2.81702 10
****
 Contact name              : DsCo
  Max Normal Load          : 30.3193
  Max Normal Stress        : -257368.
  Displacement             : 0.000155695
  Contact a-length         : 0.0215235
  Contact b-length         : 0.00261737
  Contact area             : 0.000176982
  Distance to Corner       : 0.0229658
  Effective Speed Factor   : 2.659
  Load-Life Factor         : 7.016
                                        6
  Expected Average Life    : 9.20748 10
```

```
==========================
 Ball number          : 26
 Ball angle           : 100.
 Ball position        : {2.29743, -0.615594, 0.}
 Solution current?    : Yes
 Ball activity        : ON
 Ball request         : solve
 Cross over angle          : 25.8609
 Residual Force Vector     : {-0.0394514, -0.16598, 0.00604846}
                                          -7
 Displacement Residual     : 7.16852 10
****
 Contact name              : DpCi
  Max Normal Load          : 26.7138
  Max Normal Stress        : -246756.
  Displacement             : 0.000143097
  Contact a-length         : 0.0206345
  Contact b-length         : 0.00250898
  Contact area             : 0.000162645
  Distance to Corner       : 0.0238549
  Effective Speed Factor   : 2.659
  Load-Life Factor         : 7.96292
                                        7
  Expected Average Life    : 1.52782 10
****
 Contact name              : DiCi
  Max Normal Load          : 12.8802
  Max Normal Stress        : -192627.
  Displacement             : 0.000087207
  Contact a-length         : 0.0161084
  Contact b-length         : 0.00195872
  Contact area             : 0.0000991231
  Distance to Corner: Dp   : 0.0101416
  Distance to Corner: Ds   : 0.0101416
  Effective Speed Factor   : 2.659
  Load-Life Factor         : 16.5152
                                        8
  Expected Average Life    : 2.82696 10
****
 Contact name              : DsCo
  Max Normal Load          : 30.3812
  Max Normal Stress        : -257542.
  Displacement             : 0.000155905
  Contact a-length         : 0.0215381
  Contact b-length         : 0.00261914
  Contact area             : 0.000177221
  Distance to Corner       : 0.0229513
  Effective Speed Factor   : 2.659
  Load-Life Factor         : 7.0017
                                        6
  Expected Average Life    : 9.13267 10
```

```
=========================
 Ball number          : 27
 Ball angle           : 90.
 Ball position        : {2.38153, -0.208357, 0.}
 Solution current?    : Yes
 Ball activity        : ON
 Ball request         : solve
 Cross over angle          : 25.7762
 Residual Force Vector     : {-0.010048, -0.16941, 0.00580801}
                                        -7
 Displacement Residual     : 7.13933 10
****
 Contact name              : DpCi
  Max Normal Load          : 26.7875
  Max Normal Stress        : -246982.
  Displacement             : 0.000143359
  Contact a-length         : 0.0206534
  Contact b-length         : 0.00251128
  Contact area             : 0.000162943
  Distance to Corner       : 0.023836
  Effective Speed Factor   : 2.659
  Load-Life Factor         : 7.94101
                                       7
  Expected Average Life    : 1.51107 10
****
 Contact name              : DiCi
  Max Normal Load          : 12.8687
  Max Normal Stress        : -192572.
  Displacement             : 0.0000871574
  Contact a-length         : 0.0161038
  Contact b-length         : 0.00195816
  Contact area             : 0.0000990668
  Distance to Corner: Dp   : 0.0101462
  Distance to Corner: Ds   : 0.0101462
  Effective Speed Factor   : 2.659
  Load-Life Factor         : 16.53
                                       8
  Expected Average Life    : 2.83709 10
****
 Contact name              : DsCo
  Max Normal Load          : 30.4428
  Max Normal Stress        : -257714.
  Displacement             : 0.000156114
  Contact a-length         : 0.0215525
  Contact b-length         : 0.00262089
  Contact area             : 0.000177458
  Distance to Corner       : 0.0229369
  Effective Speed Factor   : 2.659
  Load-Life Factor         : 6.98753
                                       6
  Expected Average Life    : 9.05898 10
```

```
==========================
 Ball number          : 28
 Ball angle           : 80.
 Ball position        : {2.39363, 0.209416, 0.}
 Solution current?    : Yes
 Ball activity        : ON
 Ball request         : solve
 Cross over angle          : 25.6918
 Residual Force Vector     : {0.0193535, -0.167714, 0.0055749}
                                          -7
 Displacement Residual     : 7.11064 10
****
 Contact name              : DpCi
  Max Normal Load          : 26.861
  Max Normal Stress        : -247206.
  Displacement             : 0.00014362
  Contact a-length         : 0.0206722
  Contact b-length         : 0.00251356
  Contact area             : 0.00016324
  Distance to Corner       : 0.0238172
  Effective Speed Factor   : 2.659
  Load-Life Factor         : 7.9193
                                       7
  Expected Average Life    : 1.49462 10
****
 Contact name              : DiCi
  Max Normal Load          : 12.8571
  Max Normal Stress        : -192517.
  Displacement             : 0.000087107
  Contact a-length         : 0.0160992
  Contact b-length         : 0.0019576
  Contact area             : 0.0000990096
  Distance to Corner: Dp   : 0.0101508
  Distance to Corner: Ds   : 0.0101508
  Effective Speed Factor   : 2.659
  Load-Life Factor         : 16.545
                                       8
  Expected Average Life    : 2.8474 10
****
 Contact name              : DsCo
  Max Normal Load          : 30.5041
  Max Normal Stress        : -257886.
  Displacement             : 0.000156321
  Contact a-length         : 0.0215668
  Contact b-length         : 0.00262263
  Contact area             : 0.000177694
  Distance to Corner       : 0.0229226
  Effective Speed Factor   : 2.659
  Load-Life Factor         : 6.97349
                                       6
  Expected Average Life    : 8.98639 10
```

```
==========================
 Ball number          : 29
 Ball angle           : 70.
 Ball position        : {2.33264, 0.62503, 0.}
 Solution current?    : Yes
 Ball activity        : ON
 Ball request         : solve
 Cross over angle          : 25.6077
 Residual Force Vector     : {0.0478733, -0.160995, 0.00534885}
                                                  -7
 Displacement Residual     : 7.08242 10
****
 Contact name              : DpCi
  Max Normal Load          : 26.9341
  Max Normal Stress        : -247430.
  Displacement             : 0.00014388
  Contact a-length         : 0.0206908
  Contact b-length         : 0.00251583
  Contact area             : 0.000163535
  Distance to Corner       : 0.0237985
  Effective Speed Factor   : 2.659
  Load-Life Factor         : 7.8978
                                      7
  Expected Average Life    : 1.47845 10
****
 Contact name              : DiCi
  Max Normal Load          : 12.8453
  Max Normal Stress        : -192460.
  Displacement             : 0.0000870559
  Contact a-length         : 0.0160945
  Contact b-length         : 0.00195702
  Contact area             : 0.0000989515
  Distance to Corner: Dp   : 0.0101555
  Distance to Corner: Ds   : 0.0101555
  Effective Speed Factor   : 2.659
  Load-Life Factor         : 16.5602
                                      8
  Expected Average Life    : 2.8579 10
****
 Contact name              : DsCo
  Max Normal Load          : 30.5651
  Max Normal Stress        : -258056.
  Displacement             : 0.000156528
  Contact a-length         : 0.0215811
  Contact b-length         : 0.00262437
  Contact area             : 0.000177929
  Distance to Corner       : 0.0229083
  Effective Speed Factor   : 2.659
  Load-Life Factor         : 6.95958
                                      6
  Expected Average Life    : 8.91487 10
```

```
==========================
 Ball number          : 30
 Ball angle           : 60.
 Ball position        : {2.19968, 1.02573, 0.}
 Solution current?    : Yes
 Ball activity        : ON
 Ball request         : solve
 Cross over angle          : 25.524
 Residual Force Vector     : {0.0746663, -0.149503, 0.00512962}
                                                  -7
 Displacement Residual     : 7.05467 10
****
 Contact name              : DpCi
  Max Normal Load          : 27.0069
  Max Normal Stress        : -247652.
  Displacement             : 0.000144138
  Contact a-length         : 0.0207094
  Contact b-length         : 0.00251809
  Contact area             : 0.000163828
  Distance to Corner       : 0.02378
  Effective Speed Factor   : 2.659
  Load-Life Factor         : 7.8765
                                        7
  Expected Average Life    : 1.46257 10
****
 Contact name              : DiCi
  Max Normal Load          : 12.8333
  Max Normal Stress        : -192403.
  Displacement             : 0.000087004
  Contact a-length         : 0.0160897
  Contact b-length         : 0.00195644
  Contact area             : 0.0000988925
  Distance to Corner: Dp   : 0.0101603
  Distance to Corner: Ds   : 0.0101603
  Effective Speed Factor   : 2.659
  Load-Life Factor         : 16.5757
                                        8
  Expected Average Life    : 2.86858 10
****
 Contact name              : DsCo
  Max Normal Load          : 30.6258
  Max Normal Stress        : -258225.
  Displacement             : 0.000156733
  Contact a-length         : 0.0215952
  Contact b-length         : 0.00262609
  Contact area             : 0.000178163
  Distance to Corner       : 0.0228942
  Effective Speed Factor   : 2.659
  Load-Life Factor         : 6.94578
                                        6
  Expected Average Life    : 8.84441 10
```

```
==========================
 Ball number          : 31
 Ball angle           : 50.
 Ball position        : {1.99811, 1.39909, 0.}
 Solution current?    : Yes
 Ball activity        : ON
 Ball request         : solve
 Cross over angle          : 25.4406
 Residual Force Vector     : {0.0989467, -0.133629, 0.00491695}
                                                  -7
 Displacement Residual     : 7.02736 10
****
 Contact name              : DpCi
  Max Normal Load          : 27.0795
  Max Normal Stress        : -247873.
  Displacement             : 0.000144395
  Contact a-length         : 0.0207279
  Contact b-length         : 0.00252034
  Contact area             : 0.00016412
  Distance to Corner       : 0.0237615
  Effective Speed Factor   : 2.659
  Load-Life Factor         : 7.8554
                                        7
  Expected Average Life    : 1.44696 10
****
 Contact name              : DiCi
  Max Normal Load          : 12.8212
  Max Normal Stress        : -192345.
  Displacement             : 0.0000869514
  Contact a-length         : 0.0160848
  Contact b-length         : 0.00195585
  Contact area             : 0.0000988327
  Distance to Corner: Dp   : 0.0101652
  Distance to Corner: Ds   : 0.0101652
  Effective Speed Factor   : 2.659
  Load-Life Factor         : 16.5913
                                        8
  Expected Average Life    : 2.87944 10
****
 Contact name              : DsCo
  Max Normal Load          : 30.6862
  Max Normal Stress        : -258394.
  Displacement             : 0.000156938
  Contact a-length         : 0.0216093
  Contact b-length         : 0.0026278
  Contact area             : 0.000178395
  Distance to Corner       : 0.0228801
  Effective Speed Factor   : 2.659
  Load-Life Factor         : 6.93211
                                        6
  Expected Average Life    : 8.77499 10
```

```
==========================
 Ball number          : 32
 Ball angle           : 40.
 Ball position        : {1.73339, 1.73339, 0.}
 Solution current?    : Yes
 Ball activity        : ON
 Ball request         : solve
 Cross over angle          : 25.3576
 Residual Force Vector     : {0.120011, -0.113892, 0.00471061}
                                        -7
 Displacement Residual     : 7.00047 10
****
 Contact name              : DpCi
  Max Normal Load          : 27.1517
  Max Normal Stress        : -248092.
  Displacement             : 0.000144651
  Contact a-length         : 0.0207462
  Contact b-length         : 0.00252257
  Contact area             : 0.000164411
  Distance to Corner       : 0.0237432
  Effective Speed Factor   : 2.659
  Load-Life Factor         : 7.8345
                                      7
  Expected Average Life    : 1.43163 10
****
 Contact name              : DiCi
  Max Normal Load          : 12.8089
  Max Normal Stress        : -192286.
  Displacement             : 0.000086898
  Contact a-length         : 0.0160799
  Contact b-length         : 0.00195525
  Contact area             : 0.000098772
  Distance to Corner: Dp   : 0.0101701
  Distance to Corner: Ds   : 0.0101701
  Effective Speed Factor   : 2.659
  Load-Life Factor         : 16.6072
                                      8
  Expected Average Life    : 2.89049 10
****
 Contact name              : DsCo
  Max Normal Load          : 30.7463
  Max Normal Stress        : -258561.
  Displacement             : 0.000157141
  Contact a-length         : 0.0216233
  Contact b-length         : 0.0026295
  Contact area             : 0.000178626
  Distance to Corner       : 0.0228661
  Effective Speed Factor   : 2.659
  Load-Life Factor         : 6.91856
                                      6
  Expected Average Life    : 8.70658 10
```

```
=========================
 Ball number          : 33
 Ball angle           : 30.
 Ball position        : {1.41303, 2.01802, 0.}
 Solution current?    : Yes
 Ball activity        : ON
 Ball request         : solve
 Cross over angle          : 25.275
 Residual Force Vector     : {0.137259, -0.0909208, 0.00451038}
                                                  -7
 Displacement Residual     : 6.97398 10
****
 Contact name              : DpCi
  Max Normal Load          : 27.2236
  Max Normal Stress        : -248310.
  Displacement             : 0.000144906
  Contact a-length         : 0.0207645
  Contact b-length         : 0.00252478
  Contact area             : 0.0001647
  Distance to Corner       : 0.0237249
  Effective Speed Factor   : 2.659
  Load-Life Factor         : 7.8138
                                        7
  Expected Average Life    : 1.41655 10
****
 Contact name              : DiCi
  Max Normal Load          : 12.7965
  Max Normal Stress        : -192226.
  Displacement             : 0.000086844
  Contact a-length         : 0.0160749
  Contact b-length         : 0.00195464
  Contact area             : 0.0000987105
  Distance to Corner: Dp   : 0.0101751
  Distance to Corner: Ds   : 0.0101751
  Effective Speed Factor   : 2.659
  Load-Life Factor         : 16.6233
                                        8
  Expected Average Life    : 2.90173 10
****
 Contact name              : DsCo
  Max Normal Load          : 30.8061
  Max Normal Stress        : -258727.
  Displacement             : 0.000157343
  Contact a-length         : 0.0216372
  Contact b-length         : 0.00263119
  Contact area             : 0.000178856
  Distance to Corner       : 0.0228522
  Effective Speed Factor   : 2.659
  Load-Life Factor         : 6.90514
                                        6
  Expected Average Life    : 8.63918 10
```

```
==========================
 Ball number          : 34
 Ball angle           : 20.
 Ball position        : {1.04627, 2.24374, 0.}
 Solution current?    : Yes
 Ball activity        : ON
 Ball request         : solve
 Cross over angle          : 25.1926
 Residual Force Vector     : {0.15021, -0.0654343, 0.00431605}
                                                  -7
 Displacement Residual     : 6.94788 10
****
 Contact name              : DpCi
  Max Normal Load          : 27.2953
  Max Normal Stress        : -248527.
  Displacement             : 0.000145159
  Contact a-length         : 0.0207826
  Contact b-length         : 0.00252699
  Contact area             : 0.000164988
  Distance to Corner       : 0.0237068
  Effective Speed Factor   : 2.659
  Load-Life Factor         : 7.7933
                                        7
  Expected Average Life    : 1.40174 10
****
 Contact name              : DiCi
  Max Normal Load          : 12.7839
  Max Normal Stress        : -192165.
  Displacement             : 0.0000867892
  Contact a-length         : 0.0160698
  Contact b-length         : 0.00195402
  Contact area             : 0.0000986482
  Distance to Corner: Dp   : 0.0101802
  Distance to Corner: Ds   : 0.0101802
  Effective Speed Factor   : 2.659
  Load-Life Factor         : 16.6397
                                        8
  Expected Average Life    : 2.91315 10
****
 Contact name              : DsCo
  Max Normal Load          : 30.8656
  Max Normal Stress        : -258892.
  Displacement             : 0.000157544
  Contact a-length         : 0.021651
  Contact b-length         : 0.00263287
  Contact area             : 0.000179084
  Distance to Corner       : 0.0228384
  Effective Speed Factor   : 2.659
  Load-Life Factor         : 6.89182
                                        6
  Expected Average Life    : 8.57275 10
```

```
==========================
 Ball number          : 35
 Ball angle           : 10.
 Ball position        : {0.643902, 2.40308, 0.}
 Solution current?    : Yes
 Ball activity        : ON
 Ball request         : solve
 Cross over angle          : 25.1106
 Residual Force Vector     : {0.158515, -0.0382212, 0.00412741}
                                                  -7
 Displacement Residual     : 6.92215 10
****
 Contact name              : DpCi
  Max Normal Load          : 27.3666
  Max Normal Stress        : -248743.
  Displacement             : 0.000145411
  Contact a-length         : 0.0208006
  Contact b-length         : 0.00252918
  Contact area             : 0.000165275
  Distance to Corner       : 0.0236888
  Effective Speed Factor   : 2.659
  Load-Life Factor         : 7.77298
                                      7
  Expected Average Life    : 1.38718 10
****
 Contact name              : DiCi
  Max Normal Load          : 12.7712
  Max Normal Stress        : -192104.
  Displacement             : 0.0000867336
  Contact a-length         : 0.0160647
  Contact b-length         : 0.0019534
  Contact area             : 0.0000985851
  Distance to Corner: Dp   : 0.0101853
  Distance to Corner: Ds   : 0.0101853
  Effective Speed Factor   : 2.659
  Load-Life Factor         : 16.6562
                                      8
  Expected Average Life    : 2.92476 10
****
 Contact name              : DsCo
  Max Normal Load          : 30.9248
  Max Normal Stress        : -259056.
  Displacement             : 0.000157744
  Contact a-length         : 0.0216647
  Contact b-length         : 0.00263454
  Contact area             : 0.000179312
  Distance to Corner       : 0.0228247
  Effective Speed Factor   : 2.659
  Load-Life Factor         : 6.87863
                                      6
  Expected Average Life    : 8.50729 10
```

```
=========================
 Ball number          : 36
 Ball angle           : 0.
 Ball position        : {0.217889, 2.49049, 0.}
 Solution current?    : Yes
 Ball activity        : ON
 Ball request         : solve
 Cross over angle          : 30.9987
 Residual Force Vector     : {0.651554, -0.00558584, 0.0762651}
                                                  -6
 Displacement Residual     : 2.37389 10
****
 Contact name              : DpCo
  Max Normal Load          : 25.6882
  Max Normal Stress        : -243827.
  Displacement             : 0.000139734
  Contact a-length         : 0.0203905
  Contact b-length         : 0.00247949
  Contact area             : 0.000158833
  Distance to Corner       : 0.0240989
  Effective Speed Factor   : 2.659
  Load-Life Factor         : 8.28085
                                                   7
  Expected Average Life    : 1.78683 10
****
 Contact name              : DiCi
  Max Normal Load          : 15.2168
  Max Normal Stress        : -201983.
  Displacement             : 0.0000958837
  Contact a-length         : 0.0168908
  Contact b-length         : 0.00205385
  Contact area             : 0.000108986
  Distance to Corner: Dp   : 0.00935921
  Distance to Corner: Ds   : 0.00935921
  Effective Speed Factor   : 2.659
  Load-Life Factor         : 13.9793
                                                   8
  Expected Average Life    : 1.45119 10
****
 Contact name              : DsCi
  Max Normal Load          : 28.9326
  Max Normal Stress        : -253928.
  Displacement             : 0.000151528
  Contact a-length         : 0.0212336
  Contact b-length         : 0.00258173
  Contact area             : 0.00017222
  Distance to Corner       : 0.0232557
  Effective Speed Factor   : 2.659
  Load-Life Factor         : 7.35227
                                                   7
  Expected Average Life    : 1.11037 10
```

```
=========================
Summary of Performance
=========================

 Applied Angular Twist (degrees) : 0.506528

 Total Internal Loads (Fx,Fy,Fz)
 Primary Disk                    : {-345.358, 63.6729, -753.367}
 Intermediate Disk               : {15.3783, -27.9778, -19.827}
 Secondary Disk                  : {329.283, -40.3065, 772.057}

 Total Axial Torque (Tz)
 Primary Disk                    : 32.2415
 Intermediate Disk               : 1200.08
 Secondary Disk                  : -1199.91

 Torque Ratio: Ds/Dp             : 37.2163
 Torque Ratio: Di/Dp             : 37.2217
 Torque Ratio: Di/Ds             : 1.00014

 Tosional Stiffness (T/rad)      : 135728.

 Average Residual Force          : {0.0193435, 0.128095, 0.0315634}
                                          -6
 Average Displacement Residual   : 1.4242 10

 Dp Speed                        : 10.
 Ds Speed                        : 0.27027
 Speed Conversion Ratio          : 37.
 Effective N.D. Speed            : 20.
 Minimum Expected Average Life
                                           7
                         hours   : 1.38718 10
                         years   : 1583.54

 Average Load-Life Factor: Dp    : 8.21401
 Average Load-Life Factor: Di    : 15.2668
 Average Load-Life Factor: Ds    : 7.23351
```

```
==========================
Summary of Extreme Values
==========================

 Maximum Compressive Contact Stress Dp : -248743.
 At ball number                        : 35
 Maximum Compressive Contact Stress Di : -202180.
 At ball number                        : 17
 Maximum Compressive Contact Stress Ds : -253928.
 At ball number                        : 36

 Maximum Ball Deflection Dp            : 0.000145411
 At ball number                        : 35
 Maximum Ball Deflection Di            : 0.0000960713
 At ball number                        : 17
 Maximum Ball Deflection Ds            : 0.000157744
 At ball number                        : 35

 Maximum Ball Contact Area Dp          : 0.000165275
 At ball number                        : 35
 Maximum Ball Contact Area Di          : 0.000109199
 At ball number                        : 17
 Maximum Ball Contact Area Ds          : 0.000179312
 At ball number                        : 35

 Maximum Ball a-patch Dp               : 0.0208006
 At ball number                        : 35
 Maximum Ball a-patch Di               : 0.0169073
 At ball number                        : 17
 Maximum Ball a-patch Ds               : 0.0216647
 At ball number                        : 35

 Maximum Ball b-patch Dp               : 0.00252918
 At ball number                        : 35
 Maximum Ball b-patch Di               : 0.00205586
 At ball number                        : 17
 Maximum Ball b-patch Ds               : 0.00263454
 At ball number                        : 35

 Minimum Distance to Dp Corner         : 0.0236888
 At ball number                        : 35
 Minimum Distance to Di Corner: Dp     : 0.0093427
 At ball number                        : 17
 Minimum Distance to Di Corner: Ds     : 0.0093427
 At ball number                        : 17
 Minimum Distance to Ds Corner         : 0.0228247
 At ball number                        : 35

==========================
==========================
```

SYNKdrive^{tm} Speed Conversion Technology

Analytical and Numerical Results

Precision Speed Reducer for Robotics and Manufacturing (TRP-93-009)

Conforming Race Design
Conforming Percentage: 52%
Flank Angle: 55 degrees
Applied Torque: 1200 in-lbs

1.0 Geometric Definition

```
Summary of Conforming Race Parameters
-------------------------------------
BallDiameter                    = 0.15625

ConformingDiameter              = 0.1625
ConformingPercentage            = 52.

PrimaryFlankAngleDegrees        = 55.
IntermediateFlankAngleDegrees   = 0.
SecondaryFlankAngleDegrees      = 55.

PrimaryFractionBallDepth        = 0.3
SecondaryFractionBallDepth      = 0.3

ToleranceFraction               = 0.01

ContactToCornerDistance for Dp = 0.0570914
ContactToCornerDistance for Ds = 0.0570914
```

```
Summary of Primary Disk Parameters
----------------------------------
PrimaryDiskThickness            = 0.5
PrimaryDiskDiameter             = 6.

PrimaryRadiusMax                = 2.5
PrimaryRadiusMin                = 2.28125
PrimaryDisplacement             = 0.21875

PrimaryPhiIncrement             = 180.
PrimaryNumberLobes              = 1


Summary of Intermediate Disk Parameters
---------------------------------------
IntermediateDiskThickness       = 0.0525
IntermediateDiskDiameter        = 6.

IntermediateRadiusMax           = 2.5
IntermediateRadiusMin           = 2.28125
IntermediateDisplacement        = 0.21875
IntermediateSlotWidth           = 0.15625

IntermediateTotalSlots          = 36
IntermediateGammaIncrement      = 10.


Summary of Secondary Disk Parameters
------------------------------------
SecondaryDiskThickness          = 0.5
SecondaryDiskDiameter           = 6.

SecondaryRadiusMax              = 2.5
SecondaryRadiusMin              = 2.28125
SecondaryDisplacement           = 0.21875

SecondaryPhiIncrement           = 4.86486
SecondaryNumberLobes            = 37
```

2.0 Ball Race Section Profile

Primary and Secondary Race Profiles

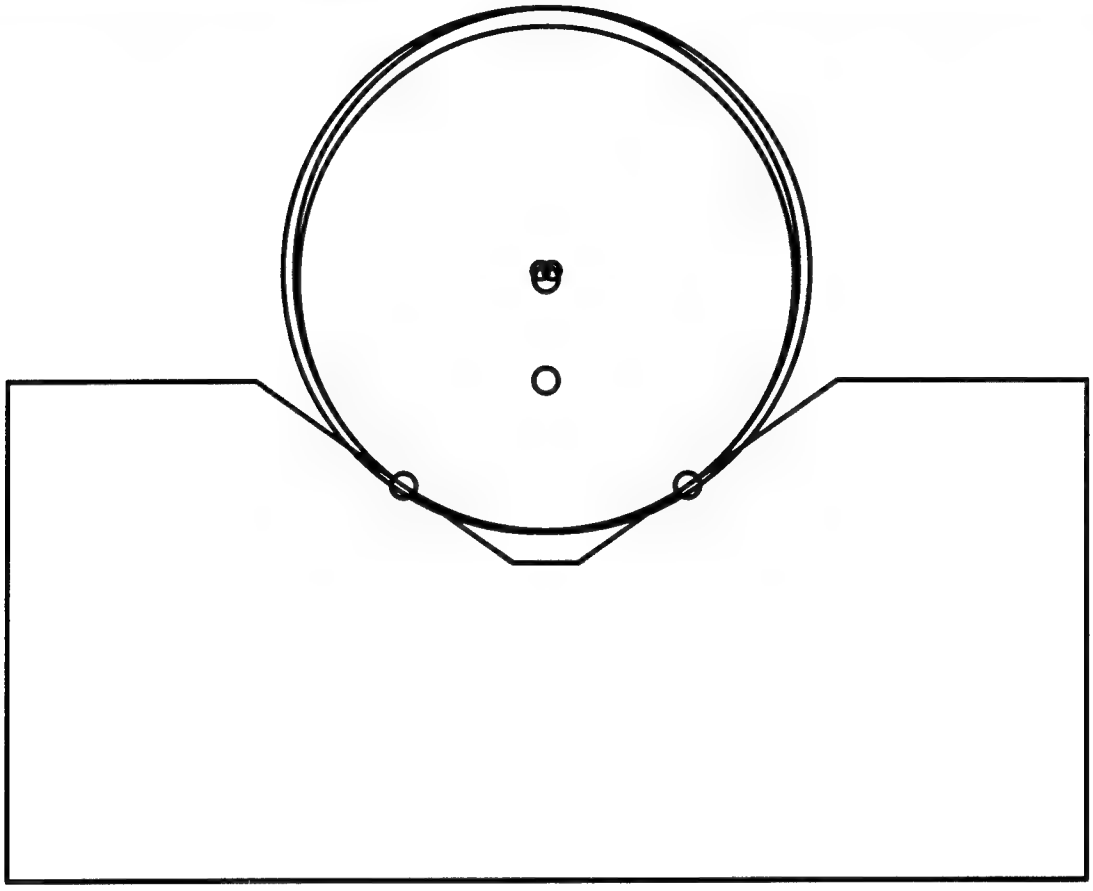

3.0 Constraints and Kinematic Results

```
Summary of Drive Constraint Parameters
--------------------------------------
PrimaryNumberLobes              = 1
SecondaryNumberLobes            = 37
IntermediateTotalSlots          = 36 (requested balls)

BallConjugateDirection          = forward drive
BallConstraintCondition         = exactly constrained

Conjugate constraints           = 36
Forward drive condition         = 36
Reverser drive condition        = 38
Predicted speed ratio           = 37 to 1


Summary of Kinematic Solver Results
-----------------------------------
PrimaryAngleStart               = 0.
PrimaryAngleFinish              = 5.
PrimaryAngleDelta               = 1.
PrimaryAngleNumber              = 6.
Speed Conversion Ratio (Dp:Ds) = 37. to 1

PrimaryDiskDeltaAngle:
   Step          Dp Angle          Ds Angle
   ----          --------          --------
                                           -17
    1              0.              2.77556 10
    2              1.              0.027027
    3              2.              0.0540541
    4              3.              0.0810811
    5              4.              0.108108
    6              5.              0.135135
```

4.0 Numerical Results

```
================================================
Summary of Stress and Displacement Calculations
================================================
 Calculated for kinematic solution : 6
 Angular Deformation               : 0.599969
 Applied Torque                    : 1199.24
```

```
=========================
 Ball number          : 1
 Ball angle           : 350.
 Ball position        : {-0.21683, 2.47838, 0.}
 Solution current?    : Yes
 Ball activity        : ON
 Ball request         : solve
 Cross over angle          : 27.6614
 Residual Force Vector     : {0.572475, 0.0213365, 0.194516}
                                          -6
 Displacement Residual     : 1.9945 10
****
 Contact name              : DpCo
  Max Normal Load          : 29.7361
  Max Normal Stress        : -255642.
  Displacement             : 0.000153604
  Contact a-length         : 0.0213786
  Contact b-length         : 0.00259964
  Contact area             : 0.000174599
  Distance to Corner       : 0.0357128
  Effective Speed Factor   : 2.659
  Load-Life Factor         : 7.15359
                                        6
  Expected Average Life    : 9.95133 10
****
 Contact name              : DiCi
  Max Normal Load          : 15.2225
  Max Normal Stress        : -202376.
  Displacement             : 0.0000962575
  Contact a-length         : 0.0169237
  Contact b-length         : 0.00205785
  Contact area             : 0.00010941
  Distance to Corner: Dp   : 0.00932631
  Distance to Corner: Ds   : 0.00932631
  Effective Speed Factor   : 2.659
  Load-Life Factor         : 13.974
                                        8
  Expected Average Life    : 1.44901 10
****
 Contact name              : DsCi
  Max Normal Load          : 32.4625
  Max Normal Stress        : -263869.
  Displacement             : 0.000163624
  Contact a-length         : 0.0220649
  Contact b-length         : 0.00268279
  Contact area             : 0.000185968
  Distance to Corner       : 0.0350265
  Effective Speed Factor   : 2.659
  Load-Life Factor         : 6.5528
                                        6
  Expected Average Life    : 7.00635 10
```

```
=========================
 Ball number          : 2
 Ball angle           : 340.
 Ball position        : {-0.640757, 2.39134, 0.}
 Solution current?    : Yes
 Ball activity        : ON
 Ball request         : solve
 Cross over angle          : 27.7324
 Residual Force Vector     : {0.553606, 0.119475, 0.192111}
                                          -6
 Displacement Residual     : 1.97085 10
****
 Contact name              : DpCo
  Max Normal Load          : 29.6676
  Max Normal Stress        : -255446.
  Displacement             : 0.000153368
  Contact a-length         : 0.0213622
  Contact b-length         : 0.00259764
  Contact area             : 0.000174331
  Distance to Corner       : 0.0357292
  Effective Speed Factor   : 2.659
  Load-Life Factor         : 7.17012
                                       7
  Expected Average Life    : 1.00436 10
****
 Contact name              : DiCi
  Max Normal Load          : 15.2231
  Max Normal Stress        : -202403.
  Displacement             : 0.0000962836
  Contact a-length         : 0.016926
  Contact b-length         : 0.00205813
  Contact area             : 0.00010944
  Distance to Corner: Dp   : 0.00932403
  Distance to Corner: Ds   : 0.00932403
  Effective Speed Factor   : 2.659
  Load-Life Factor         : 13.9735
                                       8
  Expected Average Life    : 1.4488 10
****
 Contact name              : DsCi
  Max Normal Load          : 32.4071
  Max Normal Stress        : -263712.
  Displacement             : 0.00016343
  Contact a-length         : 0.0220518
  Contact b-length         : 0.0026812
  Contact area             : 0.000185748
  Distance to Corner       : 0.0350396
  Effective Speed Factor   : 2.659
  Load-Life Factor         : 6.56398
                                       6
  Expected Average Life    : 7.0543 10
```

```
=========================
 Ball number          : 3
 Ball angle           : 330.
 Ball position        : {-1.04114, 2.23273, 0.}
 Solution current?    : Yes
 Ball activity        : ON
 Ball request         : solve
 Cross over angle          : 27.8037
 Residual Force Vector     : {0.518236, 0.211726, 0.189704}
                                          -6
 Displacement Residual     : 1.9472 10
****
 Contact name              : DpCo
  Max Normal Load          : 29.5987
  Max Normal Stress        : -255248.
  Displacement             : 0.000153131
  Contact a-length         : 0.0213457
  Contact b-length         : 0.00259563
  Contact area             : 0.000174061
  Distance to Corner       : 0.0357457
  Effective Speed Factor   : 2.659
  Load-Life Factor         : 7.1868
                                        7
  Expected Average Life    : 1.01374 10
****
 Contact name              : DiCi
  Max Normal Load          : 15.2235
  Max Normal Stress        : -202430.
  Displacement             : 0.0000963089
  Contact a-length         : 0.0169282
  Contact b-length         : 0.0020584
  Contact area             : 0.000109469
  Distance to Corner: Dp   : 0.0093218
  Distance to Corner: Ds   : 0.0093218
  Effective Speed Factor   : 2.659
  Load-Life Factor         : 13.9732
                                        8
  Expected Average Life    : 1.44865 10
****
 Contact name              : DsCi
  Max Normal Load          : 32.3516
  Max Normal Stress        : -263555.
  Displacement             : 0.000163235
  Contact a-length         : 0.0220386
  Contact b-length         : 0.0026796
  Contact area             : 0.000185526
  Distance to Corner       : 0.0350527
  Effective Speed Factor   : 2.659
  Load-Life Factor         : 6.57526
                                        6
  Expected Average Life    : 7.10289 10
```

```
=========================
 Ball number          : 4
 Ball angle           : 320.
 Ball position        : {-1.40606, 2.00806, 0.}
 Solution current?    : Yes
 Ball activity        : ON
 Ball request         : solve
 Cross over angle          : 27.8753
 Residual Force Vector     : {0.46783, 0.295375, 0.187295}
                                          -6
 Displacement Residual     : 1.92353 10
****
 Contact name              : DpCo
  Max Normal Load          : 29.5296
  Max Normal Stress        : -255050.
  Displacement             : 0.000152893
  Contact a-length         : 0.021329
  Contact b-length         : 0.00259361
  Contact area             : 0.000173791
  Distance to Corner       : 0.0357623
  Effective Speed Factor   : 2.659
  Load-Life Factor         : 7.20361
                                        7
  Expected Average Life    : 1.02326 10
****
 Contact name              : DiCi
  Max Normal Load          : 15.2237
  Max Normal Stress        : -202456.
  Displacement             : 0.0000963336
  Contact a-length         : 0.0169304
  Contact b-length         : 0.00205866
  Contact area             : 0.000109497
  Distance to Corner: Dp   : 0.00931962
  Distance to Corner: Ds   : 0.00931962
  Effective Speed Factor   : 2.659
  Load-Life Factor         : 13.9729
                                        8
  Expected Average Life    : 1.44855 10
****
 Contact name              : DsCi
  Max Normal Load          : 32.2957
  Max Normal Stress        : -263397.
  Displacement             : 0.000163039
  Contact a-length         : 0.0220254
  Contact b-length         : 0.00267799
  Contact area             : 0.000185303
  Distance to Corner       : 0.0350659
  Effective Speed Factor   : 2.659
  Load-Life Factor         : 6.58663
                                        6
  Expected Average Life    : 7.15214 10
```

```
==========================
 Ball number          : 5
 Ball angle           : 310.
 Ball position        : {-1.7248, 1.7248, 0.}
 Solution current?    : Yes
 Ball activity        : ON
 Ball request         : solve
 Cross over angle          : 27.9472
 Residual Force Vector     : {0.404291, 0.368033, 0.184884}
                                          -6
 Displacement Residual     : 1.89985 10
****
 Contact name              : DpCo
  Max Normal Load          : 29.4602
  Max Normal Stress        : -254850.
  Displacement             : 0.000152654
  Contact a-length         : 0.0213124
  Contact b-length         : 0.00259158
  Contact area             : 0.000173519
  Distance to Corner       : 0.035779
  Effective Speed Factor   : 2.659
  Load-Life Factor         : 7.22058
                                        7
  Expected Average Life    : 1.03293 10
****
 Contact name              : DiCi
  Max Normal Load          : 15.2238
  Max Normal Stress        : -202481.
  Displacement             : 0.0000963577
  Contact a-length         : 0.0169325
  Contact b-length         : 0.00205892
  Contact area             : 0.000109524
  Distance to Corner: Dp   : 0.00931751
  Distance to Corner: Ds   : 0.00931751
  Effective Speed Factor   : 2.659
  Load-Life Factor         : 13.9729
                                        8
  Expected Average Life    : 1.44852 10
****
 Contact name              : DsCi
  Max Normal Load          : 32.2396
  Max Normal Stress        : -263238.
  Displacement             : 0.000162842
  Contact a-length         : 0.0220121
  Contact b-length         : 0.00267638
  Contact area             : 0.00018508
  Distance to Corner       : 0.0350793
  Effective Speed Factor   : 2.659
  Load-Life Factor         : 6.59809
                                        6
  Expected Average Life    : 7.20205 10
```

```
==========================
 Ball number          : 6
 Ball angle           : 300.
 Ball position        : {-1.98815, 1.39212, 0.}
 Solution current?    : Yes
 Ball activity        : ON
 Ball request         : solve
 Cross over angle          : 28.0194
 Residual Force Vector     : {0.329888, 0.427712, 0.182472}
                                          -6
 Displacement Residual     : 1.87617 10
****
 Contact name              : DpCo
  Max Normal Load          : 29.3906
  Max Normal Stress        : -254650.
  Displacement             : 0.000152414
  Contact a-length         : 0.0212956
  Contact b-length         : 0.00258954
  Contact area             : 0.000173245
  Distance to Corner       : 0.0357958
  Effective Speed Factor   : 2.659
  Load-Life Factor         : 7.23769
                                        7
  Expected Average Life    : 1.04276 10
****
 Contact name              : DiCi
  Max Normal Load          : 15.2237
  Max Normal Stress        : -202506.
  Displacement             : 0.0000963811
  Contact a-length         : 0.0169345
  Contact b-length         : 0.00205917
  Contact area             : 0.000109551
  Distance to Corner: Dp   : 0.00931546
  Distance to Corner: Ds   : 0.00931546
  Effective Speed Factor   : 2.659
  Load-Life Factor         : 13.9729
                                          8
  Expected Average Life    : 1.44855 10
****
 Contact name              : DsCi
  Max Normal Load          : 32.1833
  Max Normal Stress        : -263078.
  Displacement             : 0.000162644
  Contact a-length         : 0.0219987
  Contact b-length         : 0.00267475
  Contact area             : 0.000184854
  Distance to Corner       : 0.0350926
  Effective Speed Factor   : 2.659
  Load-Life Factor         : 6.60964
                                        6
  Expected Average Life    : 7.25264 10
```

```
=========================
 Ball number          : 7
 Ball angle           : 290.
 Ball position        : {-2.18867, 1.02059, 0.}
 Solution current?    : Yes
 Ball activity        : ON
 Ball request         : solve
 Cross over angle          : 28.0919
 Residual Force Vector     : {0.247177, 0.472872, 0.180058}
                                        -6
 Displacement Residual     : 1.85249 10
****
 Contact name              : DpCo
  Max Normal Load          : 29.3207
  Max Normal Stress        : -254448.
  Displacement             : 0.000152172
  Contact a-length         : 0.0212787
  Contact b-length         : 0.00258749
  Contact area             : 0.000172971
  Distance to Corner       : 0.0358127
  Effective Speed Factor   : 2.659
  Load-Life Factor         : 7.25495
                                      7
  Expected Average Life    : 1.05274 10
****
 Contact name              : DiCi
  Max Normal Load          : 15.2235
  Max Normal Stress        : -202530.
  Displacement             : 0.0000964038
  Contact a-length         : 0.0169365
  Contact b-length         : 0.00205941
  Contact area             : 0.000109577
  Distance to Corner: Dp   : 0.00931347
  Distance to Corner: Ds   : 0.00931347
  Effective Speed Factor   : 2.659
  Load-Life Factor         : 13.9731
                                      8
  Expected Average Life    : 1.44864 10
****
 Contact name              : DsCi
  Max Normal Load          : 32.1266
  Max Normal Stress        : -262916.
  Displacement             : 0.000162445
  Contact a-length         : 0.0219852
  Contact b-length         : 0.00267311
  Contact area             : 0.000184628
  Distance to Corner       : 0.0351061
  Effective Speed Factor   : 2.659
  Load-Life Factor         : 6.6213
                                      6
  Expected Average Life    : 7.30391 10
```

```
==========================
 Ball number          : 8
 Ball angle           : 280.
 Ball position        : {-2.32091, 0.621885, 0.}
 Solution current?    : Yes
 Ball activity        : ON
 Ball request         : solve
 Cross over angle          : 28.1647
 Residual Force Vector     : {0.158914, 0.502463, 0.177644}
                                                  -6
 Displacement Residual     : 1.8288 10
****
 Contact name              : DpCo
  Max Normal Load          : 29.2504
  Max Normal Stress        : -254245.
  Displacement             : 0.000151929
  Contact a-length         : 0.0212617
  Contact b-length         : 0.00258542
  Contact area             : 0.000172695
  Distance to Corner       : 0.0358296
  Effective Speed Factor   : 2.659
  Load-Life Factor         : 7.27237
                                                   7
  Expected Average Life    : 1.06289 10
****
 Contact name              : DiCi
  Max Normal Load          : 15.2231
  Max Normal Stress        : -202553.
  Displacement             : 0.0000964257
  Contact a-length         : 0.0169385
  Contact b-length         : 0.00205965
  Contact area             : 0.000109602
  Distance to Corner: Dp   : 0.00931153
  Distance to Corner: Ds   : 0.00931153
  Effective Speed Factor   : 2.659
  Load-Life Factor         : 13.9735
                                                   8
  Expected Average Life    : 1.44879 10
****
 Contact name              : DsCi
  Max Normal Load          : 32.0697
  Max Normal Stress        : -262755.
  Displacement             : 0.000162245
  Contact a-length         : 0.0219717
  Contact b-length         : 0.00267146
  Contact area             : 0.000184401
  Distance to Corner       : 0.0351197
  Effective Speed Factor   : 2.659
  Load-Life Factor         : 6.63304
                                                   6
  Expected Average Life    : 7.35589 10
```

```
=========================
 Ball number          : 9
 Ball angle           : 270.
 Ball position        : {-2.38153, 0.208357, 0.}
 Solution current?    : Yes
 Ball activity        : ON
 Ball request         : solve
 Cross over angle          : 28.2377
 Residual Force Vector     : {0.0679635, 0.515946, 0.175229}
                                                  -6
 Displacement Residual     : 1.80511 10
****
 Contact name              : DpCo
  Max Normal Load          : 29.18
  Max Normal Stress        : -254041.
  Displacement             : 0.000151685
  Contact a-length         : 0.0212446
  Contact b-length         : 0.00258335
  Contact area             : 0.000172418
  Distance to Corner       : 0.0358467
  Effective Speed Factor   : 2.659
  Load-Life Factor         : 7.28993
                                        7
  Expected Average Life    : 1.07319 10
****
 Contact name              : DiCi
  Max Normal Load          : 15.2225
  Max Normal Stress        : -202575.
  Displacement             : 0.000096447
  Contact a-length         : 0.0169403
  Contact b-length         : 0.00205988
  Contact area             : 0.000109626
  Distance to Corner: Dp   : 0.00930966
  Distance to Corner: Ds   : 0.00930966
  Effective Speed Factor   : 2.659
  Load-Life Factor         : 13.974
                                       8
  Expected Average Life    : 1.449 10
****
 Contact name              : DsCi
  Max Normal Load          : 32.0126
  Max Normal Stress        : -262592.
  Displacement             : 0.000162044
  Contact a-length         : 0.0219581
  Contact b-length         : 0.00266981
  Contact area             : 0.000184172
  Distance to Corner       : 0.0351333
  Effective Speed Factor   : 2.659
  Load-Life Factor         : 6.64489
                                        6
  Expected Average Life    : 7.40857 10
```

```
=========================
 Ball number          : 10
 Ball angle           : 260.
 Ball position        : {-2.36942, -0.207298, 0.}
 Solution current?    : Yes
 Ball activity        : ON
 Ball request         : solve
 Cross over angle          : 28.3111
 Residual Force Vector     : {-0.022795, 0.5133, 0.172813}
                                          -6
 Displacement Residual     : 1.78143 10
****
 Contact name              : DpCo
  Max Normal Load          : 29.1092
  Max Normal Stress        : -253835.
  Displacement             : 0.00015144
  Contact a-length         : 0.0212275
  Contact b-length         : 0.00258126
  Contact area             : 0.000172139
  Distance to Corner       : 0.0358639
  Effective Speed Factor   : 2.659
  Load-Life Factor         : 7.30766
                                       7
  Expected Average Life    : 1.08367 10
****
 Contact name              : DiCi
  Max Normal Load          : 15.2218
  Max Normal Stress        : -202597.
  Displacement             : 0.0000964676
  Contact a-length         : 0.0169421
  Contact b-length         : 0.00206009
  Contact area             : 0.000109649
  Distance to Corner: Dp   : 0.00930786
  Distance to Corner: Ds   : 0.00930786
  Effective Speed Factor   : 2.659
  Load-Life Factor         : 13.9747
                                       8
  Expected Average Life    : 1.44927 10
****
 Contact name              : DsCi
  Max Normal Load          : 31.9551
  Max Normal Stress        : -262428.
  Displacement             : 0.000161841
  Contact a-length         : 0.0219444
  Contact b-length         : 0.00266814
  Contact area             : 0.000183943
  Distance to Corner       : 0.035147
  Effective Speed Factor   : 2.659
  Load-Life Factor         : 6.65683
                                       6
  Expected Average Life    : 7.46198 10
```

```
==========================
 Ball number          : 11
 Ball angle           : 250.
 Ball position        : {-2.28569, -0.612449, 0.}
 Solution current?    : Yes
 Ball activity        : ON
 Ball request         : solve
 Cross over angle          : 28.3847
 Residual Force Vector     : {-0.110557, 0.495006, 0.170398}
                                                  -6
 Displacement Residual     : 1.75776 10
****
 Contact name              : DpCo
  Max Normal Load          : 29.0382
  Max Normal Stress        : -253629.
  Displacement             : 0.000151194
  Contact a-length         : 0.0212102
  Contact b-length         : 0.00257916
  Contact area             : 0.000171859
  Distance to Corner       : 0.0358812
  Effective Speed Factor   : 2.659
  Load-Life Factor         : 7.32553
                                        7
  Expected Average Life    : 1.09431 10
****
 Contact name              : DiCi
  Max Normal Load          : 15.2209
  Max Normal Stress        : -202618.
  Displacement             : 0.0000964875
  Contact a-length         : 0.0169439
  Contact b-length         : 0.00206031
  Contact area             : 0.000109672
  Distance to Corner: Dp   : 0.00930611
  Distance to Corner: Ds   : 0.00930611
  Effective Speed Factor   : 2.659
  Load-Life Factor         : 13.9755
                                        8
  Expected Average Life    : 1.44961 10
****
 Contact name              : DsCi
  Max Normal Load          : 31.8974
  Max Normal Stress        : -262263.
  Displacement             : 0.000161638
  Contact a-length         : 0.0219306
  Contact b-length         : 0.00266647
  Contact area             : 0.000183712
  Distance to Corner       : 0.0351608
  Effective Speed Factor   : 2.659
  Load-Life Factor         : 6.66888
                                        6
  Expected Average Life    : 7.51613 10
```

```
==========================
 Ball number         : 12
 Ball angle          : 240.
 Ball position       : {-2.1336, -0.994914, 0.}
 Solution current?   : Yes
 Ball activity       : ON
 Ball request        : solve
 Cross over angle          : 28.4586
 Residual Force Vector     : {-0.192681, 0.462026, 0.167983}
                                        -6
 Displacement Residual     : 1.7341 10
****
 Contact name              : DpCo
  Max Normal Load          : 28.9668
  Max Normal Stress        : -253421.
  Displacement             : 0.000150947
  Contact a-length         : 0.0211928
  Contact b-length         : 0.00257705
  Contact area             : 0.000171578
  Distance to Corner       : 0.0358985
  Effective Speed Factor   : 2.659
  Load-Life Factor         : 7.34357
                                       7
  Expected Average Life    : 1.10513 10
****
 Contact name              : DiCi
  Max Normal Load          : 15.2199
  Max Normal Stress        : -202638.
  Displacement             : 0.0000965066
  Contact a-length         : 0.0169456
  Contact b-length         : 0.00206051
  Contact area             : 0.000109694
  Distance to Corner: Dp   : 0.00930443
  Distance to Corner: Ds   : 0.00930443
  Effective Speed Factor   : 2.659
  Load-Life Factor         : 13.9765
                                       8
  Expected Average Life    : 1.45001 10
****
 Contact name              : DsCi
  Max Normal Load          : 31.8395
  Max Normal Stress        : -262097.
  Displacement             : 0.000161434
  Contact a-length         : 0.0219167
  Contact b-length         : 0.00266478
  Contact area             : 0.000183479
  Distance to Corner       : 0.0351746
  Effective Speed Factor   : 2.659
  Load-Life Factor         : 6.68102
                                       6
  Expected Average Life    : 7.57102 10
```

```
==========================
 Ball number          : 13
 Ball angle           : 230.
 Ball position        : {-1.91847, -1.34332, 0.}
 Solution current?    : Yes
 Ball activity        : ON
 Ball request         : solve
 Cross over angle         : 28.5329
 Residual Force Vector    : {-0.266766, 0.415756, 0.165569}
                                      -6
 Displacement Residual    : 1.71045 10
****
 Contact name             : DpCo
  Max Normal Load         : 28.8953
  Max Normal Stress       : -253212.
  Displacement            : 0.000150698
  Contact a-length        : 0.0211754
  Contact b-length        : 0.00257492
  Contact area            : 0.000171295
  Distance to Corner      : 0.035916
  Effective Speed Factor  : 2.659
  Load-Life Factor        : 7.36176
                                    7
  Expected Average Life   : 1.11612 10
****
 Contact name             : DiCi
  Max Normal Load         : 15.2187
  Max Normal Stress       : -202657.
  Displacement            : 0.000096525
  Contact a-length        : 0.0169472
  Contact b-length        : 0.00206071
  Contact area            : 0.000109714
  Distance to Corner: Dp  : 0.00930281
  Distance to Corner: Ds  : 0.00930281
  Effective Speed Factor  : 2.659
  Load-Life Factor        : 13.9776
                                    8
  Expected Average Life   : 1.45048 10
****
 Contact name             : DsCi
  Max Normal Load         : 31.7812
  Max Normal Stress       : -261930.
  Displacement            : 0.000161229
  Contact a-length        : 0.0219028
  Contact b-length        : 0.00266309
  Contact area            : 0.000183246
  Distance to Corner      : 0.0351886
  Effective Speed Factor  : 2.659
  Load-Life Factor        : 6.69327
                                    6
  Expected Average Life   : 7.62668 10
```

```
=========================
 Ball number          : 14
 Ball angle           : 220.
 Ball position        : {-1.64746, -1.64746, 0.}
 Solution current?    : Yes
 Ball activity        : ON
 Ball request         : solve
 Cross over angle          : 28.6074
 Residual Force Vector     : {-0.330726, 0.357973, 0.163156}
                                          -6
 Displacement Residual     : 1.68682 10
****
 Contact name              : DpCo
  Max Normal Load          : 28.8234
  Max Normal Stress        : -253003.
  Displacement             : 0.000150448
  Contact a-length         : 0.0211578
  Contact b-length         : 0.00257279
  Contact area             : 0.000171011
  Distance to Corner       : 0.0359335
  Effective Speed Factor   : 2.659
  Load-Life Factor         : 7.38012
                                        7
  Expected Average Life    : 1.12729 10
****
 Contact name              : DiCi
  Max Normal Load          : 15.2173
  Max Normal Stress        : -202676.
  Displacement             : 0.0000965427
  Contact a-length         : 0.0169487
  Contact b-length         : 0.0020609
  Contact area             : 0.000109735
  Distance to Corner: Dp   : 0.00930126
  Distance to Corner: Ds   : 0.00930126
  Effective Speed Factor   : 2.659
  Load-Life Factor         : 13.9788
                                        8
  Expected Average Life    : 1.45101 10
****
 Contact name              : DsCi
  Max Normal Load          : 31.7227
  Max Normal Stress        : -261763.
  Displacement             : 0.000161022
  Contact a-length         : 0.0218888
  Contact b-length         : 0.00266138
  Contact area             : 0.000183012
  Distance to Corner       : 0.0352026
  Effective Speed Factor   : 2.659
  Load-Life Factor         : 6.70561
                                        6
  Expected Average Life    : 7.68312 10
```

```
=========================
 Ball number          : 15
 Ball angle           : 210.
 Ball position        : {-1.32938, -1.89856, 0.}
 Solution current?    : Yes
 Ball activity        : ON
 Ball request         : solve
 Cross over angle          : 28.6822
 Residual Force Vector     : {-0.382844, 0.29077, 0.160745}
                                          -6
 Displacement Residual     : 1.6632 10
****
 Contact name              : DpCo
  Max Normal Load          : 28.7513
  Max Normal Stress        : -252791.
  Displacement             : 0.000150197
  Contact a-length         : 0.0211402
  Contact b-length         : 0.00257064
  Contact area             : 0.000170726
  Distance to Corner       : 0.0359512
  Effective Speed Factor   : 2.659
  Load-Life Factor         : 7.39863
                                       7
  Expected Average Life    : 1.13865 10
****
 Contact name              : DiCi
  Max Normal Load          : 15.2157
  Max Normal Stress        : -202693.
  Displacement             : 0.0000965596
  Contact a-length         : 0.0169502
  Contact b-length         : 0.00206108
  Contact area             : 0.000109754
  Distance to Corner: Dp   : 0.00929978
  Distance to Corner: Ds   : 0.00929978
  Effective Speed Factor   : 2.659
  Load-Life Factor         : 13.9803
                                       8
  Expected Average Life    : 1.4516 10
****
 Contact name              : DsCi
  Max Normal Load          : 31.6639
  Max Normal Stress        : -261594.
  Displacement             : 0.000160815
  Contact a-length         : 0.0218747
  Contact b-length         : 0.00265967
  Contact area             : 0.000182776
  Distance to Corner       : 0.0352167
  Effective Speed Factor   : 2.659
  Load-Life Factor         : 6.71806
                                       6
  Expected Average Life    : 7.74034 10
```

```
==========================
 Ball number          : 16
 Ball angle           : 200.
 Ball position        : {-0.97437, -2.08954, 0.}
 Solution current?    : Yes
 Ball activity        : ON
 Ball request         : solve
 Cross over angle          : 28.7573
 Residual Force Vector     : {-0.421819, 0.216481, 0.158335}
                                                  -6
 Displacement Residual     : 1.63961 10
****
 Contact name              : DpCo
  Max Normal Load          : 28.6788
  Max Normal Stress        : -252579.
  Displacement             : 0.000149945
  Contact a-length         : 0.0211224
  Contact b-length         : 0.00256848
  Contact area             : 0.000170439
  Distance to Corner       : 0.0359689
  Effective Speed Factor   : 2.659
  Load-Life Factor         : 7.41731
                                        7
  Expected Average Life    : 1.15019 10
****
 Contact name              : DiCi
  Max Normal Load          : 15.214
  Max Normal Stress        : -202710.
  Displacement             : 0.0000965758
  Contact a-length         : 0.0169516
  Contact b-length         : 0.00206125
  Contact area             : 0.000109772
  Distance to Corner: Dp   : 0.00929836
  Distance to Corner: Ds   : 0.00929836
  Effective Speed Factor   : 2.659
  Load-Life Factor         : 13.9819
                                        8
  Expected Average Life    : 1.45226 10
****
 Contact name              : DsCi
  Max Normal Load          : 31.6048
  Max Normal Stress        : -261424.
  Displacement             : 0.000160606
  Contact a-length         : 0.0218605
  Contact b-length         : 0.00265794
  Contact area             : 0.000182539
  Distance to Corner       : 0.0352309
  Effective Speed Factor   : 2.659
  Load-Life Factor         : 6.73062
                                        6
  Expected Average Life    : 7.79837 10
```

```
=========================
 Ball number          : 17
 Ball angle           : 190.
 Ball position        : {-0.593576, -2.21526, 0.}
 Solution current?    : Yes
 Ball activity        : ON
 Ball request         : solve
 Cross over angle          : 28.8327
 Residual Force Vector     : {-0.446795, 0.137601, 0.155928}
                                          -6
 Displacement Residual     : 1.61604 10
****
 Contact name              : DpCo
  Max Normal Load          : 28.6062
  Max Normal Stress        : -252366.
  Displacement             : 0.000149692
  Contact a-length         : 0.0211045
  Contact b-length         : 0.00256631
  Contact area             : 0.000170151
  Distance to Corner       : 0.0359868
  Effective Speed Factor   : 2.659
  Load-Life Factor         : 7.43616
                                        7
  Expected Average Life    : 1.16193 10
****
 Contact name              : DiCi
  Max Normal Load          : 15.2121
  Max Normal Stress        : -202726.
  Displacement             : 0.0000965912
  Contact a-length         : 0.016953
  Contact b-length         : 0.00206141
  Contact area             : 0.00010979
  Distance to Corner: Dp   : 0.00929701
  Distance to Corner: Ds   : 0.00929701
  Effective Speed Factor   : 2.659
  Load-Life Factor         : 13.9836
                                        8
  Expected Average Life    : 1.45299 10
****
 Contact name              : DsCi
  Max Normal Load          : 31.5455
  Max Normal Stress        : -261254.
  Displacement             : 0.000160397
  Contact a-length         : 0.0218462
  Contact b-length         : 0.00265621
  Contact area             : 0.000182301
  Distance to Corner       : 0.0352451
  Effective Speed Factor   : 2.659
  Load-Life Factor         : 6.74328
                                        6
  Expected Average Life    : 7.85722 10
```

```
=========================
 Ball number          : 18
 Ball angle           : 180.
 Ball position        : {-0.198824, -2.27257, 0.}
 Solution current?    : Yes
 Ball activity        : ON
 Ball request         : solve
 Cross over angle          : 23.6486
 Residual Force Vector     : {-0.217299, 0.0157389, 0.00292947}
                                        -7
 Displacement Residual     : 9.31768 10
****
 Contact name              : DpCi
  Max Normal Load          : 30.028
  Max Normal Stress        : -256584.
  Displacement             : 0.000154724
  Contact a-length         : 0.0214564
  Contact b-length         : 0.00260892
  Contact area             : 0.00017586
  Distance to Corner       : 0.035635
  Effective Speed Factor   : 2.659
  Load-Life Factor         : 7.08405
                                      6
  Expected Average Life    : 9.56995 10
****
 Contact name              : DiCi
  Max Normal Load          : 12.8951
  Max Normal Stress        : -192469.
  Displacement             : 0.0000870639
  Contact a-length         : 0.0160952
  Contact b-length         : 0.00195711
  Contact area             : 0.0000989605
  Distance to Corner: Dp   : 0.0101548
  Distance to Corner: Ds   : 0.0101548
  Effective Speed Factor   : 2.659
  Load-Life Factor         : 16.4962
                                        8
  Expected Average Life    : 2.81394 10
****
 Contact name              : DsCo
  Max Normal Load          : 33.3267
  Max Normal Stress        : -265617.
  Displacement             : 0.000165834
  Contact a-length         : 0.0222134
  Contact b-length         : 0.00270126
  Contact area             : 0.000188508
  Distance to Corner       : 0.034878
  Effective Speed Factor   : 2.659
  Load-Life Factor         : 6.38287
                                      6
  Expected Average Life    : 6.30734 10
```

```
=========================
 Ball number          : 19
 Ball angle           : 170.
 Ball position        : {0.199883, -2.28468, 0.}
 Solution current?    : Yes
 Ball activity        : ON
 Ball request         : solve
 Cross over angle          : 23.5709
 Residual Force Vector     : {-0.21445, -0.0219824, 0.00270928}
                                                  -7
 Displacement Residual     : 9.22815 10
****
 Contact name              : DpCi
  Max Normal Load          : 30.1052
  Max Normal Stress        : -256802.
  Displacement             : 0.000154987
  Contact a-length         : 0.0214746
  Contact b-length         : 0.00261114
  Contact area             : 0.000176159
  Distance to Corner       : 0.0356167
  Effective Speed Factor   : 2.659
  Load-Life Factor         : 7.06589
                                        6
  Expected Average Life    : 9.47219 10
****
 Contact name              : DiCi
  Max Normal Load          : 12.882
  Max Normal Stress        : -192412.
  Displacement             : 0.0000870128
  Contact a-length         : 0.0160905
  Contact b-length         : 0.00195654
  Contact area             : 0.0000989024
  Distance to Corner: Dp   : 0.0101595
  Distance to Corner: Ds   : 0.0101595
  Effective Speed Factor   : 2.659
  Load-Life Factor         : 16.513
                                        8
  Expected Average Life    : 2.82542 10
****
 Contact name              : DsCo
  Max Normal Load          : 33.3931
  Max Normal Stress        : -265791.
  Displacement             : 0.000166052
  Contact a-length         : 0.0222279
  Contact b-length         : 0.00270303
  Contact area             : 0.000188755
  Distance to Corner       : 0.0348635
  Effective Speed Factor   : 2.659
  Load-Life Factor         : 6.37019
                                        6
  Expected Average Life    : 6.25738 10
```

```
=========================
 Ball number          : 20
 Ball angle           : 160.
 Ball position        : {0.596722, -2.227, 0.}
 Solution current?    : Yes
 Ball activity        : ON
 Ball request         : solve
 Cross over angle          : 23.4935
 Residual Force Vector     : {-0.205222, -0.05826, 0.00249814}
                                                  -7
 Displacement Residual     : 9.14064 10
****
 Contact name              : DpCi
  Max Normal Load          : 30.1821
  Max Normal Stress        : -257019.
  Displacement             : 0.000155248
  Contact a-length         : 0.0214927
  Contact b-length         : 0.00261334
  Contact area             : 0.000176456
  Distance to Corner       : 0.0355986
  Effective Speed Factor   : 2.659
  Load-Life Factor         : 7.04789
                                        6
  Expected Average Life    : 9.37606 10
****
 Contact name              : DiCi
  Max Normal Load          : 12.8688
  Max Normal Stress        : -192355.
  Displacement             : 0.0000869609
  Contact a-length         : 0.0160857
  Contact b-length         : 0.00195595
  Contact area             : 0.0000988434
  Distance to Corner: Dp   : 0.0101643
  Distance to Corner: Ds   : 0.0101643
  Effective Speed Factor   : 2.659
  Load-Life Factor         : 16.53
                                        8
  Expected Average Life    : 2.83708 10
****
 Contact name              : DsCo
  Max Normal Load          : 33.459
  Max Normal Stress        : -265964.
  Displacement             : 0.000166268
  Contact a-length         : 0.0222423
  Contact b-length         : 0.00270478
  Contact area             : 0.000189
  Distance to Corner       : 0.034849
  Effective Speed Factor   : 2.659
  Load-Life Factor         : 6.35762
                                        6
  Expected Average Life    : 6.20816 10
```

```
=========================
 Ball number          : 21
 Ball angle           : 150.
 Ball position        : {0.979506, -2.10056, 0.}
 Solution current?    : Yes
 Ball activity        : ON
 Ball request         : solve
 Cross over angle          : 23.4165
 Residual Force Vector     : {-0.190021, -0.0920436, 0.00229561}
                                                  -7
 Displacement Residual     : 9.05505 10
****
 Contact name              : DpCi
  Max Normal Load          : 30.2586
  Max Normal Stress        : -257234.
  Displacement             : 0.000155508
  Contact a-length         : 0.0215107
  Contact b-length         : 0.00261553
  Contact area             : 0.000176752
  Distance to Corner       : 0.0355806
  Effective Speed Factor   : 2.659
  Load-Life Factor         : 7.03006
                                        6
  Expected Average Life    : 9.28155 10
****
 Contact name              : DiCi
  Max Normal Load          : 12.8554
  Max Normal Stress        : -192297.
  Displacement             : 0.0000869082
  Contact a-length         : 0.0160808
  Contact b-length         : 0.00195536
  Contact area             : 0.0000987836
  Distance to Corner: Dp   : 0.0101692
  Distance to Corner: Ds   : 0.0101692
  Effective Speed Factor   : 2.659
  Load-Life Factor         : 16.5472
                                        8
  Expected Average Life    : 2.8489 10
****
 Contact name              : DsCo
  Max Normal Load          : 33.5247
  Max Normal Stress        : -266135.
  Displacement             : 0.000166482
  Contact a-length         : 0.0222567
  Contact b-length         : 0.00270653
  Contact area             : 0.000189245
  Distance to Corner       : 0.0348346
  Effective Speed Factor   : 2.659
  Load-Life Factor         : 6.34517
                                        6
  Expected Average Life    : 6.15966 10
```

```
=========================
 Ball number         : 22
 Ball angle          : 140.
 Ball position       : {1.33635, -1.90851, 0.}
 Solution current?   : Yes
 Ball activity       : ON
 Ball request        : solve
 Cross over angle         : 23.3397
 Residual Force Vector    : {-0.16942, -0.122377, 0.0021013}
                                      -7
 Displacement Residual    : 8.97131 10
****
 Contact name             : DpCi
  Max Normal Load         : 30.3348
  Max Normal Stress       : -257448.
  Displacement            : 0.000155767
  Contact a-length        : 0.0215286
  Contact b-length        : 0.0026177
  Contact area            : 0.000177046
  Distance to Corner      : 0.0355627
  Effective Speed Factor  : 2.659
  Load-Life Factor        : 7.0124
                                    6
  Expected Average Life   : 9.18862 10
****
 Contact name             : DiCi
  Max Normal Load         : 12.8419
  Max Normal Stress       : -192238.
  Displacement            : 0.0000868548
  Contact a-length        : 0.0160759
  Contact b-length        : 0.00195476
  Contact area            : 0.0000987228
  Distance to Corner: Dp  : 0.0101741
  Distance to Corner: Ds  : 0.0101741
  Effective Speed Factor  : 2.659
  Load-Life Factor        : 16.5646
                                     8
  Expected Average Life   : 2.8609 10
****
 Contact name             : DsCo
  Max Normal Load         : 33.59
  Max Normal Stress       : -266306.
  Displacement            : 0.000166696
  Contact a-length        : 0.022271
  Contact b-length        : 0.00270826
  Contact area            : 0.000189487
  Distance to Corner      : 0.0348204
  Effective Speed Factor  : 2.659
  Load-Life Factor        : 6.33283
                                    6
  Expected Average Life   : 6.11187 10
```

```
==========================
 Ball number          : 23
 Ball angle           : 130.
 Ball position        : {1.65605, -1.65605, 0.}
 Solution current?    : Yes
 Ball activity        : ON
 Ball request         : solve
 Cross over angle          : 23.2633
 Residual Force Vector     : {-0.144142, -0.148427, 0.00191485}
                                                  -7
 Displacement Residual     : 8.88937 10
****
 Contact name              : DpCi
  Max Normal Load          : 30.4107
  Max Normal Stress        : -257661.
  Displacement             : 0.000156025
  Contact a-length         : 0.0215464
  Contact b-length         : 0.00261987
  Contact area             : 0.000177339
  Distance to Corner       : 0.0355449
  Effective Speed Factor   : 2.659
  Load-Life Factor         : 6.9949
                                        6
  Expected Average Life    : 9.09723 10
****
 Contact name              : DiCi
  Max Normal Load          : 12.8283
  Max Normal Stress        : -192178.
  Displacement             : 0.0000868006
  Contact a-length         : 0.0160709
  Contact b-length         : 0.00195415
  Contact area             : 0.0000986612
  Distance to Corner: Dp   : 0.0101791
  Distance to Corner: Ds   : 0.0101791
  Effective Speed Factor   : 2.659
  Load-Life Factor         : 16.5821
                                        8
  Expected Average Life    : 2.87307 10
****
 Contact name              : DsCo
  Max Normal Load          : 33.6551
  Max Normal Stress        : -266476.
  Displacement             : 0.000166908
  Contact a-length         : 0.0222852
  Contact b-length         : 0.00270999
  Contact area             : 0.000189729
  Distance to Corner       : 0.0348062
  Effective Speed Factor   : 2.659
  Load-Life Factor         : 6.3206
                                        6
  Expected Average Life    : 6.06479 10
```

```
=========================
 Ball number          : 24
 Ball angle           : 120.
 Ball position        : {1.92842, -1.35029, 0.}
 Solution current?    : Yes
 Ball activity        : ON
 Ball request         : solve
 Cross over angle          : 23.1872
 Residual Force Vector     : {-0.115032, -0.169499, 0.00173589}
                                                  -7
 Displacement Residual     : 8.80914 10
****
 Contact name              : DpCi
  Max Normal Load          : 30.4863
  Max Normal Stress        : -257872.
  Displacement             : 0.000156281
  Contact a-length         : 0.0215641
  Contact b-length         : 0.00262202
  Contact area             : 0.00017763
  Distance to Corner       : 0.0355273
  Effective Speed Factor   : 2.659
  Load-Life Factor         : 6.97756
                                        6
  Expected Average Life    : 9.00736 10
****
 Contact name              : DiCi
  Max Normal Load          : 12.8145
  Max Normal Stress        : -192117.
  Displacement             : 0.0000867457
  Contact a-length         : 0.0160658
  Contact b-length         : 0.00195353
  Contact area             : 0.0000985988
  Distance to Corner: Dp   : 0.0101842
  Distance to Corner: Ds   : 0.0101842
  Effective Speed Factor   : 2.659
  Load-Life Factor         : 16.5999
                                        8
  Expected Average Life    : 2.88541 10
****
 Contact name              : DsCo
  Max Normal Load          : 33.7197
  Max Normal Stress        : -266644.
  Displacement             : 0.00016712
  Contact a-length         : 0.0222993
  Contact b-length         : 0.0027117
  Contact area             : 0.000189969
  Distance to Corner       : 0.0347921
  Effective Speed Factor   : 2.659
  Load-Life Factor         : 6.30847
                                        6
  Expected Average Life    : 6.01839 10
```

```
=========================
 Ball number          : 25
 Ball angle           : 110.
 Ball position        : {2.14461, -1.00005, 0.}
 Solution current?    : Yes
 Ball activity        : ON
 Ball request         : solve
 Cross over angle          : 23.1113
 Residual Force Vector     : {-0.0830355, -0.185063, 0.0015641}
                                                  -7
 Displacement Residual     : 8.73057 10
****
 Contact name              : DpCi
  Max Normal Load          : 30.5616
  Max Normal Stress        : -258083.
  Displacement             : 0.000156536
  Contact a-length         : 0.0215817
  Contact b-length         : 0.00262416
  Contact area             : 0.00017792
  Distance to Corner       : 0.0355097
  Effective Speed Factor   : 2.659
  Load-Life Factor         : 6.96038
                                        6
  Expected Average Life    : 8.91897 10
****
 Contact name              : DiCi
  Max Normal Load          : 12.8007
  Max Normal Stress        : -192055.
  Displacement             : 0.00008669
  Contact a-length         : 0.0160606
  Contact b-length         : 0.0019529
  Contact area             : 0.0000985355
  Distance to Corner: Dp   : 0.0101894
  Distance to Corner: Ds   : 0.0101894
  Effective Speed Factor   : 2.659
  Load-Life Factor         : 16.6179
                                        8
  Expected Average Life    : 2.89793 10
****
 Contact name              : DsCo
  Max Normal Load          : 33.7841
  Max Normal Stress        : -266812.
  Displacement             : 0.00016733
  Contact a-length         : 0.0223133
  Contact b-length         : 0.00271341
  Contact area             : 0.000190208
  Distance to Corner       : 0.0347781
  Effective Speed Factor   : 2.659
  Load-Life Factor         : 6.29646
                                        6
  Expected Average Life    : 5.97266 10
```

```
=========================
 Ball number          : 26
 Ball angle           : 100.
 Ball position        : {2.29743, -0.615594, 0.}
 Solution current?    : Yes
 Ball activity        : ON
 Ball request         : solve
 Cross over angle          : 23.0358
 Residual Force Vector     : {-0.0491617, -0.194762, 0.00139917}
                                                  -7
 Displacement Residual     : 8.65359 10
****
 Contact name              : DpCi
  Max Normal Load          : 30.6365
  Max Normal Stress        : -258292.
  Displacement             : 0.00015679
  Contact a-length         : 0.0215992
  Contact b-length         : 0.00262628
  Contact area             : 0.000178208
  Distance to Corner       : 0.0354922
  Effective Speed Factor   : 2.659
  Load-Life Factor         : 6.94335
                                        6
  Expected Average Life    : 8.83204 10
****
 Contact name              : DiCi
  Max Normal Load          : 12.7867
  Max Normal Stress        : -191993.
  Displacement             : 0.0000866336
  Contact a-length         : 0.0160554
  Contact b-length         : 0.00195227
  Contact area             : 0.0000984714
  Distance to Corner: Dp   : 0.0101946
  Distance to Corner: Ds   : 0.0101946
  Effective Speed Factor   : 2.659
  Load-Life Factor         : 16.6361
                                       8
  Expected Average Life    : 2.91062 10
****
 Contact name              : DsCo
  Max Normal Load          : 33.8481
  Max Normal Stress        : -266978.
  Displacement             : 0.000167539
  Contact a-length         : 0.0223272
  Contact b-length         : 0.0027151
  Contact area             : 0.000190445
  Distance to Corner       : 0.0347641
  Effective Speed Factor   : 2.659
  Load-Life Factor         : 6.28454
                                        6
  Expected Average Life    : 5.9276 10
```

```
=========================
 Ball number          : 27
 Ball angle           : 90.
 Ball position        : {2.38153, -0.208357, 0.}
 Solution current?    : Yes
 Ball activity        : ON
 Ball request         : solve
 Cross over angle          : 22.9606
 Residual Force Vector     : {-0.0144586, -0.198417, 0.00124079}
                                          -7
 Displacement Residual     : 8.57815 10
****
 Contact name              : DpCi
  Max Normal Load          : 30.7111
  Max Normal Stress        : -258500.
  Displacement             : 0.000157042
  Contact a-length         : 0.0216165
  Contact b-length         : 0.00262839
  Contact area             : 0.000178495
  Distance to Corner       : 0.0354748
  Effective Speed Factor   : 2.659
  Load-Life Factor         : 6.92649
                                        6
  Expected Average Life    : 8.74653 10
****
 Contact name              : DiCi
  Max Normal Load          : 12.7726
  Max Normal Stress        : -191929.
  Displacement             : 0.0000865765
  Contact a-length         : 0.0160501
  Contact b-length         : 0.00195163
  Contact area             : 0.0000984065
  Distance to Corner: Dp   : 0.0101999
  Distance to Corner: Ds   : 0.0101999
  Effective Speed Factor   : 2.659
  Load-Life Factor         : 16.6544
                                        8
  Expected Average Life    : 2.9235 10
****
 Contact name              : DsCo
  Max Normal Load          : 33.9118
  Max Normal Stress        : -267144.
  Displacement             : 0.000167747
  Contact a-length         : 0.0223411
  Contact b-length         : 0.00271679
  Contact area             : 0.000190682
  Distance to Corner       : 0.0347503
  Effective Speed Factor   : 2.659
  Load-Life Factor         : 6.27274
                                        6
  Expected Average Life    : 5.88319 10
```

```
=========================
 Ball number         : 28
 Ball angle          : 80.
 Ball position       : {2.39363, 0.209416, 0.}
 Solution current?   : Yes
 Ball activity       : ON
 Ball request        : solve
 Cross over angle          : 22.8857
 Residual Force Vector     : {0.0200215, -0.196035, 0.00108868}
                                                  -7
 Displacement Residual     : 8.50419 10
****
 Contact name              : DpCi
  Max Normal Load          : 30.7854
  Max Normal Stress        : -258707.
  Displacement             : 0.000157294
  Contact a-length         : 0.0216338
  Contact b-length         : 0.0026305
  Contact area             : 0.000178781
  Distance to Corner       : 0.0354575
  Effective Speed Factor   : 2.659
  Load-Life Factor         : 6.90977
                                        6
  Expected Average Life    : 8.66241 10
****
 Contact name              : DiCi
  Max Normal Load          : 12.7584
  Max Normal Stress        : -191865.
  Displacement             : 0.0000865187
  Contact a-length         : 0.0160447
  Contact b-length         : 0.00195097
  Contact area             : 0.0000983408
  Distance to Corner: Dp   : 0.0102053
  Distance to Corner: Ds   : 0.0102053
  Effective Speed Factor   : 2.659
  Load-Life Factor         : 16.673
                                        8
  Expected Average Life    : 2.93655 10
****
 Contact name              : DsCo
  Max Normal Load          : 33.9752
  Max Normal Stress        : -267308.
  Displacement             : 0.000167953
  Contact a-length         : 0.0223548
  Contact b-length         : 0.00271846
  Contact area             : 0.000190917
  Distance to Corner       : 0.0347365
  Effective Speed Factor   : 2.659
  Load-Life Factor         : 6.26104
                                        6
  Expected Average Life    : 5.83941 10
```

```
=========================
 Ball number         : 29
 Ball angle          : 70.
 Ball position       : {2.33264, 0.62503, 0.}
 Solution current?   : Yes
 Ball activity       : ON
 Ball request        : solve
 Cross over angle          : 22.8111
 Residual Force Vector     : {0.053252, -0.187799, 0.000942587}
                                                  -7
 Displacement Residual     : 8.43166 10
****
 Contact name              : DpCi
  Max Normal Load          : 30.8593
  Max Normal Stress        : -258912.
  Displacement             : 0.000157543
  Contact a-length         : 0.021651
  Contact b-length         : 0.00263258
  Contact area             : 0.000179065
  Distance to Corner       : 0.0354403
  Effective Speed Factor   : 2.659
  Load-Life Factor         : 6.89321
                                       6
  Expected Average Life    : 8.57966 10
****
 Contact name              : DiCi
  Max Normal Load          : 12.744
  Max Normal Stress        : -191800.
  Displacement             : 0.0000864602
  Contact a-length         : 0.0160393
  Contact b-length         : 0.00195031
  Contact area             : 0.0000982744
  Distance to Corner: Dp   : 0.0102107
  Distance to Corner: Ds   : 0.0102107
  Effective Speed Factor   : 2.659
  Load-Life Factor         : 16.6917
                                       8
  Expected Average Life    : 2.94978 10
****
 Contact name              : DsCo
  Max Normal Load          : 34.0383
  Max Normal Stress        : -267472.
  Displacement             : 0.000168159
  Contact a-length         : 0.0223685
  Contact b-length         : 0.00272012
  Contact area             : 0.00019115
  Distance to Corner       : 0.0347229
  Effective Speed Factor   : 2.659
  Load-Life Factor         : 6.24944
                                       6
  Expected Average Life    : 5.79626 10
```

```
=========================
 Ball number          : 30
 Ball angle           : 60.
 Ball position        : {2.19968, 1.02573, 0.}
 Solution current?    : Yes
 Ball activity        : ON
 Ball request         : solve
 Cross over angle         : 22.7368
 Residual Force Vector    : {0.0842627, -0.174064, 0.000802246}
                                        -7
 Displacement Residual    : 8.36051 10
****
 Contact name             : DpCi
  Max Normal Load         : 30.933
  Max Normal Stress       : -259116.
  Displacement            : 0.000157792
  Contact a-length        : 0.0216681
  Contact b-length        : 0.00263466
  Contact area            : 0.000179347
  Distance to Corner      : 0.0354233
  Effective Speed Factor  : 2.659
  Load-Life Factor        : 6.8768
                                      6
  Expected Average Life   : 8.49825 10
****
 Contact name             : DiCi
  Max Normal Load         : 12.7296
  Max Normal Stress       : -191735.
  Displacement            : 0.000086401
  Contact a-length        : 0.0160338
  Contact b-length        : 0.00194965
  Contact area            : 0.0000982071
  Distance to Corner: Dp  : 0.0102162
  Distance to Corner: Ds  : 0.0102162
  Effective Speed Factor  : 2.659
  Load-Life Factor        : 16.7107
                                        8
  Expected Average Life   : 2.9632 10
****
 Contact name             : DsCo
  Max Normal Load         : 34.101
  Max Normal Stress       : -267634.
  Displacement            : 0.000168363
  Contact a-length        : 0.0223821
  Contact b-length        : 0.00272178
  Contact area            : 0.000191383
  Distance to Corner      : 0.0347093
  Effective Speed Factor  : 2.659
  Load-Life Factor        : 6.23794
                                      6
  Expected Average Life   : 5.75372 10
```

```
=========================
 Ball number         : 31
 Ball angle          : 50.
 Ball position       : {1.99811, 1.39909, 0.}
 Solution current?   : Yes
 Ball activity       : ON
 Ball request        : solve
 Cross over angle          : 22.6628
 Residual Force Vector     : {0.112167, -0.155343, 0.000667422}
                                        -7
 Displacement Residual     : 8.2907 10
****
 Contact name              : DpCi
  Max Normal Load          : 31.0063
  Max Normal Stress        : -259319.
  Displacement             : 0.000158039
  Contact a-length         : 0.0216851
  Contact b-length         : 0.00263672
  Contact area             : 0.000179628
  Distance to Corner       : 0.0354063
  Effective Speed Factor   : 2.659
  Load-Life Factor         : 6.86054
                                       6
  Expected Average Life    : 8.41816 10
****
 Contact name              : DiCi
  Max Normal Load          : 12.715
  Max Normal Stress        : -191668.
  Displacement             : 0.0000863412
  Contact a-length         : 0.0160283
  Contact b-length         : 0.00194897
  Contact area             : 0.0000981391
  Distance to Corner: Dp   : 0.0102217
  Distance to Corner: Ds   : 0.0102217
  Effective Speed Factor   : 2.659
  Load-Life Factor         : 16.7298
                                       8
  Expected Average Life    : 2.9768 10
****
 Contact name              : DsCo
  Max Normal Load          : 34.1634
  Max Normal Stress        : -267796.
  Displacement             : 0.000168566
  Contact a-length         : 0.0223956
  Contact b-length         : 0.00272342
  Contact area             : 0.000191614
  Distance to Corner       : 0.0346958
  Effective Speed Factor   : 2.659
  Load-Life Factor         : 6.22654
                                       6
  Expected Average Life    : 5.71178 10
```

```
=========================
 Ball number          : 32
 Ball angle           : 40.
 Ball position        : {1.73339, 1.73339, 0.}
 Solution current?    : Yes
 Ball activity        : ON
 Ball request         : solve
 Cross over angle          : 22.5891
 Residual Force Vector     : {0.136185, -0.132286, 0.000537887}
                                                  -7
 Displacement Residual     : 8.22216 10
****
 Contact name              : DpCi
  Max Normal Load          : 31.0793
  Max Normal Stress        : -259521.
  Displacement             : 0.000158286
  Contact a-length         : 0.0217019
  Contact b-length         : 0.00263878
  Contact area             : 0.000179908
  Distance to Corner       : 0.0353894
  Effective Speed Factor   : 2.659
  Load-Life Factor         : 6.84443
                                        6
  Expected Average Life    : 8.33935 10
****
 Contact name              : DiCi
  Max Normal Load          : 12.7003
  Max Normal Stress        : -191601.
  Displacement             : 0.0000862807
  Contact a-length         : 0.0160226
  Contact b-length         : 0.00194829
  Contact area             : 0.0000980703
  Distance to Corner: Dp   : 0.0102274
  Distance to Corner: Ds   : 0.0102274
  Effective Speed Factor   : 2.659
  Load-Life Factor         : 16.7492
                                        8
  Expected Average Life    : 2.99059 10
****
 Contact name              : DsCo
  Max Normal Load          : 34.2255
  Max Normal Stress        : -267956.
  Displacement             : 0.000168769
  Contact a-length         : 0.022409
  Contact b-length         : 0.00272505
  Contact area             : 0.000191843
  Distance to Corner       : 0.0346823
  Effective Speed Factor   : 2.659
  Load-Life Factor         : 6.21525
                                        6
  Expected Average Life    : 5.67044 10
```

```
==========================
 Ball number          : 33
 Ball angle           : 30.
 Ball position        : {1.41303, 2.01802, 0.}
 Solution current?    : Yes
 Ball activity        : ON
 Ball request         : solve
 Cross over angle         : 22.5157
 Residual Force Vector    : {0.15567, -0.105662, 0.000413426}
                                      -7
 Displacement Residual    : 8.15487 10
****
 Contact name             : DpCi
  Max Normal Load         : 31.152
  Max Normal Stress       : -259722.
  Displacement            : 0.00015853
  Contact a-length        : 0.0217187
  Contact b-length        : 0.00264082
  Contact area            : 0.000180186
  Distance to Corner      : 0.0353726
  Effective Speed Factor  : 2.659
  Load-Life Factor        : 6.82846
                                    6
  Expected Average Life   : 8.2618 10
****
 Contact name             : DiCi
  Max Normal Load         : 12.6855
  Max Normal Stress       : -191533.
  Displacement            : 0.0000862195
  Contact a-length        : 0.016017
  Contact b-length        : 0.0019476
  Contact area            : 0.0000980007
  Distance to Corner: Dp  : 0.010233
  Distance to Corner: Ds  : 0.010233
  Effective Speed Factor  : 2.659
  Load-Life Factor        : 16.7687
                                     8
  Expected Average Life   : 3.00456 10
****
 Contact name             : DsCo
  Max Normal Load         : 34.2873
  Max Normal Stress       : -268116.
  Displacement            : 0.00016897
  Contact a-length        : 0.0224223
  Contact b-length        : 0.00272667
  Contact area            : 0.000192072
  Distance to Corner      : 0.034669
  Effective Speed Factor  : 2.659
  Load-Life Factor        : 6.20405
                                     6
  Expected Average Life   : 5.62968 10
```

```
=========================
 Ball number          : 34
 Ball angle           : 20.
 Ball position        : {1.04627, 2.24374, 0.}
 Solution current?    : Yes
 Ball activity        : ON
 Ball request         : solve
 Cross over angle          : 22.4426
 Residual Force Vector     : {0.170118, -0.0763317, 0.000293833}
                                                  -7
 Displacement Residual     : 8.08878 10
****
 Contact name              : DpCi
  Max Normal Load          : 31.2243
  Max Normal Stress        : -259921.
  Displacement             : 0.000158774
  Contact a-length         : 0.0217354
  Contact b-length         : 0.00264284
  Contact area             : 0.000180463
  Distance to Corner       : 0.0353559
  Effective Speed Factor   : 2.659
  Load-Life Factor         : 6.81264
                                        6
  Expected Average Life    : 8.18549 10
****
 Contact name              : DiCi
  Max Normal Load          : 12.6706
  Max Normal Stress        : -191465.
  Displacement             : 0.0000861576
  Contact a-length         : 0.0160112
  Contact b-length         : 0.0019469
  Contact area             : 0.0000979304
  Distance to Corner: Dp   : 0.0102388
  Distance to Corner: Ds   : 0.0102388
  Effective Speed Factor   : 2.659
  Load-Life Factor         : 16.7884
                                        8
  Expected Average Life    : 3.01871 10
****
 Contact name              : DsCo
  Max Normal Load          : 34.3488
  Max Normal Stress        : -268274.
  Displacement             : 0.000169169
  Contact a-length         : 0.0224356
  Contact b-length         : 0.00272829
  Contact area             : 0.000192299
  Distance to Corner       : 0.0346557
  Effective Speed Factor   : 2.659
  Load-Life Factor         : 6.19294
                                        6
  Expected Average Life    : 5.58949 10
```

```
==========================
 Ball number          : 36
 Ball angle           : 0.
 Ball position        : {0.217889, 2.49049, 0.}
 Solution current?    : Yes
 Ball activity        : ON
 Ball request         : solve
 Cross over angle          : 27.5906
 Residual Force Vector     : {0.57387, -0.0797235, 0.196918}
                                        -6
 Displacement Residual     : 2.01813 10
****
 Contact name              : DpCo
  Max Normal Load          : 29.8044
  Max Normal Stress        : -255837.
  Displacement             : 0.000153839
  Contact a-length         : 0.0213949
  Contact b-length         : 0.00260162
  Contact area             : 0.000174866
  Distance to Corner       : 0.0356965
  Effective Speed Factor   : 2.659
  Load-Life Factor         : 7.13721
                                      6
  Expected Average Life    : 9.86046 10
****
 Contact name              : DiCi
  Max Normal Load          : 15.2218
  Max Normal Stress        : -202348.
  Displacement             : 0.0000962309
  Contact a-length         : 0.0169213
  Contact b-length         : 0.00205757
  Contact area             : 0.00010938
  Distance to Corner: Dp   : 0.00932866
  Distance to Corner: Ds   : 0.00932866
  Effective Speed Factor   : 2.659
  Load-Life Factor         : 13.9747
                                      8
  Expected Average Life    : 1.44928 10
****
 Contact name              : DsCi
  Max Normal Load          : 32.5175
  Max Normal Stress        : -264024.
  Displacement             : 0.000163817
  Contact a-length         : 0.0220779
  Contact b-length         : 0.00268437
  Contact area             : 0.000186187
  Distance to Corner       : 0.0350135
  Effective Speed Factor   : 2.659
  Load-Life Factor         : 6.54171
                                      6
  Expected Average Life    : 6.95903 10
```

```
==========================
Summary of Performance
==========================

 Applied Angular Twist (degrees) : 0.599969

 Total Internal Loads (Fx,Fy,Fz)
 Primary Disk                    : {-351.092, 65.1845, -920.724}
 Intermediate Disk               : {15.9569, -29.5115, -16.7809}
 Secondary Disk                  : {333.907, -39.1693, 934.303}

 Total Axial Torque (Tz)
 Primary Disk                    : 32.7714
 Intermediate Disk               : 1197.69
 Secondary Disk                  : -1199.24

 Torque Ratio: Ds/Dp             : 36.5941
 Torque Ratio: Di/Dp             : 36.5467
 Torque Ratio: Di/Ds             : 0.998705

 Tosional Stiffness (T/rad)      : 114525.

 Average Residual Force          : {0.0341081, 0.0971192, 0.0889187}
                                          -6
 Average Displacement Residual   : 1.34031 10

 Dp Speed                        : 10.
 Ds Speed                        : 0.27027
 Speed Conversion Ratio          : 37.
 Effective N.D. Speed            : 20.
 Minimum Expected Average Life
                                           6
                          hours  : 8.11039 10
                          years  : 925.843

  Average Load-Life Factor: Dp   : 7.11009
  Average Load-Life Factor: Di   : 15.3118
  Average Load-Life Factor: Ds   : 6.46015
```

```
=========================
Summary of Extreme Values
=========================

 Maximum Compressive Contact Stress Dp : -260120.
 At ball number                        : 35
 Maximum Compressive Contact Stress Di : -202726.
 At ball number                        : 17
 Maximum Compressive Contact Stress Ds : -264024.
 At ball number                        : 36

 Maximum Ball Deflection Dp            : 0.000159016
 At ball number                        : 35
 Maximum Ball Deflection Di            : 0.0000965912
 At ball number                        : 17
 Maximum Ball Deflection Ds            : 0.000169368
 At ball number                        : 35

 Maximum Ball Contact Area Dp          : 0.000180739
 At ball number                        : 35
 Maximum Ball Contact Area Di          : 0.00010979
 At ball number                        : 17
 Maximum Ball Contact Area Ds          : 0.000192525
 At ball number                        : 35

 Maximum Ball a-patch Dp               : 0.021752
 At ball number                        : 35
 Maximum Ball a-patch Di               : 0.016953
 At ball number                        : 17
 Maximum Ball a-patch Ds               : 0.0224488
 At ball number                        : 35

 Maximum Ball b-patch Dp               : 0.00264486
 At ball number                        : 35
 Maximum Ball b-patch Di               : 0.00206141
 At ball number                        : 17
 Maximum Ball b-patch Ds               : 0.00272989
 At ball number                        : 35

 Minimum Distance to Dp Corner         : 0.0353394
 At ball number                        : 35
 Minimum Distance to Di Corner: Dp     : 0.00929701
 At ball number                        : 17
 Minimum Distance to Di Corner: Ds     : 0.00929701
 At ball number                        : 17
 Minimum Distance to Ds Corner         : 0.0346426
 At ball number                        : 35

=========================
=========================
```